www.andamiro.com

SERVICE MANUAL

Ver 1.0_s

ISSUEDATE:Nov. 16, 2018

STOP

IMPORTANT

- Please read the manual carefully and keep it in mind before using this machine.
- Put this manual within touch of your reference in anytime.

PRECAUTIONS FOR USE

The following safety precautions are given throughout this manual. They must be strictly followed to protect those who install, use or maintain this product as well as to protect players, visitors and property.

For safty reasons.

- The following suggestions should be adhered to:

⚠ WARNING
Disregarding could result in serious injury.

⚠ CAUTION
Disregarding could result in injury or product damage.

- **The following graphic suggestions describe the types of precautions to be followed.**

⚠
Indicates a care should be taken.

⊘
Forbidden.

Indicates a matter which must be performed.

- **Precautions to be followed:**

Certain procedures require a qualified in-shop maintenance person or industry specialist. For such instructions, a qualified person must take care of the jobs.

- Otherwise an electric shock, machine trouble, or a serious accident may result.
- Replacing the machine parts, inspecting and maintaining the machines, and troubleshooting must be assigned only to a qualified in-shop maintenance person or industry specialist. This booklet gives instructions that hazardous jobs in particular must be handled by an industry specialist. Qualified in-shop maintenance person and industry specialist are defined as follows.

Qualified in-shop maintenance person

- A service staff shall have experience in operations of game machines. The staff shall be responsible for assembly, installation, inspection and maintenance of the machine.

Industry specialist

- An industry specialist must be engaged in designing, manufacturing, inspecting and servicing amusement machines. He or she must have an education in electrical, electronic and mechanical engineering, and routinely maintain and repair amusement machines.

PRECAUTIONS FOR USE

⚠ WARNING

If there is any abnormality such as smoke, bad smell or abnormal noise being emitted from the machine, immediately turn OFF the main power switch and unplug the power cord from the receptacle to stop operating it.

- Using the machine in abnormal conditions could result in fire or accidents.

In case of abnormality

1. Turn OFF the main power switch.
2. Unplug the power cord from the receptacle.
3 . Contact your nearest dealer.

Do not leave the power cord plugged in improperly or covered with dust.

- Doing so could resu t the power cord periodically.

⚠ CAUTION

Do not use this product anywhere other than industrial areas.

- Using in a residential area or an area next to a residential area could affect signal reception of radios, television sets, telephones, etc..
- Do not give shock the surface of glass products.

- Please do not play this game if
  - When you do drinking;
  - When your physical condition is not normal;
  - When you are in pregnancy;
  - When you have on a pulse controller;
  - When you have recently experienced a cramp or fainting away while watching TV.
- Avoid excessive force/shock while playing/moving the game.
- While do games, pay attention to surrounding.

Do not plug or unplug the power cord with wet hands.

In handling the power cord, follow the instructions below.

- Do not damage the power cord.
- Do not bend the power cord excessively.
- Do not heat the power cord.
- Do not bind the power cord.
- Do not sandwich the power cord.
- Do not modify the power cord.
- Do not twist the power cord.
- Do not pull the power cord.
- Do not stand on the power cord.
- Do not drive a nail into the power cord.

If the power cord or power plug becomes damaged, stop using the machine immediately and ask your nearest dealer to replace the parts.

PRECAUTIONS FOR USE

⚠ WARNING

Be sure to consult an industry specialist when setting up, moving or transporting this product.

- This product should not be set up, moved or transported by any one other than an industry specialist.
- When installing this product, set the 4 leg levelers evenly on the floor and make sure that the product is installed stably in a horizontal position. Unstable installation may result in injury or accident.
- When installing this product, do not apply undue force on movable parts. Otherwise, injury and accident may result, or the product may be damaged.

The machine for indoor usage only does not install outside.

Do not set the game machine up near emergency exits.

Protect the game machine from:

- Rain or moisture.
- Direct sunlight.
- Direct heat from air-conditioning and heating equipment, etc..
- Hazardous flammable substances.
- Otherwise an accident or malfunction may result.

Do not place containers holding chemicals or water on or near the game machine.

Do not place objects near the ventilating holes.

Do not bend the power cord by force or place heavy objects on it.

Never plug or unplug the power cord with wet hands.

Never unplug the game machine by pulling the power cord.

⚠ CAUTION

Be sure to use indoor wiring within the specified voltage requirements. For extension cord, use the specified rating or more.

Be sure to use the attached power cord.

Never plug more than one cord at a time into the electrical receptacle.

Do not lay the power cord where people walk through.

Be sure to ground this product.

Do not exert excessive force when moving the machine.

For proper ventilation, keep the game machine 100mm(4″) away from the walls.

Do not alter the system related dipswitch settings.

PRECAUTIONS FOR USE

⚠ WARNING

Be sure to turn OFF the main power switch and unplug the power cord from the receptacle before inspecting or cleaning the machine.

When replacing parts, be sure to use parts of the correct specifications. Never use parts other than the specified ones.

Opening inside the machine shall be done by machine specialist only as high electric current is being sent inside. For game machine with monitor, a care should be taken while opening its back door. If not, a damage to the inside parts or the monitor may occur.

If the sub power switch of the service panel is turned OFF without turning OFF the main power switch of the power supply unit, some parts in the units remain live. When opening the back door, be sure to turn OFF the main power switch and unplug the power cord from the receptacle.

Strictly refrain from disassembly and repair of parts which are not indicated in this manual, as well as settings and remodeling.

To clean the game machine, wipe it with a soft cloth dampened in a neutral detergent.

- Using thinner of other organic solvent or alcohol may decompose the material.
- Electrical shock or equipment failure could be caused by water entering the inside of the machine.

⚠ CAUTION

Components in the game are sensitive to vibrations and impact. Care should be used when moving and transporting the game machine.
Be sure not to let the machine tip over.

Before moving the machine, be sure to turn OFF the main power switch, unplug the power cord from the receptacle and remove the power cord form the machine.

Before moving take the machine, off the levelers and move it on the casters.

Avoid excessive force while moving the machine.

PRECAUTIONS IN HANDLING

- When setting up, inspecting, maintaining, moving or transporting this product, follow the procedures and instructions set forth in this manual and perform such work safely.
- Do not set up, handle, inspect, maintain, move or transport this product under conditions equivalent to the condition of "WARNING" or "CAUTION" specified in this manual.
- If a new owner is to have this product as a result of transfer, etc., be sure to give this manual to the new owner.

PRÉCAUTION D’EMPLOI

Les consignes de sécurité suivantes sont données dans ce manuel. Elles doivent être strictement suivies pour protéger ceux qui les installent. Utiliser ou entretenir ce produit pour la sécurité des utilisateurs, des visiteurs et des biens.

Pour des raisons de sécurité.

- **Les suggestions suivantes doivent être respectées:**

ATTENTION
Le non-respect peut entraîner des blessures graves.

PRUDENCE
Le non-respect peut entraîner des blessures ou des dommages au produit.

- **Les suggestions graphiques suivantes décrivent les types de précautions à prendre.**

Indique qu’attention est requise.

Interdit.

Indique que quelque chose doit être effectuée.

- **Les précautions à prendre :**

Certaines procédures exigent une personne de maintenance qualifiée en atelier ou un spécialiste de l'industrie. Pour ces instructions, une personne qualifiée doit prendre soin des travaux.

- Sinon, un choc électrique, un dysfonctionnement de la machine, ou un accident grave peut en résulter.
- Remplacement des pièces de machines, l'inspection et la maintenance des machines, et le dépannage doit être attribué qu'à une personne de maintenance qualifiée en atelier ou spécialiste de l'industrie. Cette brochure donne des instructions que les emplois dangereux, en particulier, doivent être traités par un spécialiste de l'industrie. La personne de maintenance qualifiée en atelier et le spécialiste de l'industrie sont définis comme suit.

La personne de maintenance qualifiée en atelier

- Un personnel de service doit avoir de l'expérience dans les opérations de machines de jeux. Le personnel est responsable pour l'assemblage, l'installation, l'inspection et l'entretien de la machine.

Le spécialiste de l'industrie

- Un spécialiste de l'industrie doit être engagé dans la conception, la fabrication, l'inspection et l'entretien des appareils d'amusement.
  Il ou elle doit avoir une formation en génie électrique, électronique et mécanique, et de maintenir régulièrement et de réparer les appareils d'amusement.

PRÉCAUTION D’EMPLOI

ATTENTION

Si il y a une anomalie comme fumée, mauvaise odeur ou bruit anormal émis par la machine, couper immédiatement l'interrupteur principal et débranchez le câble d'alimentation de la prise pour arrêter son fonctionnement.

- L’utilisation de l'appareil dans des conditions anormales peut provoquer un incendie ou un accident.

En cas d'anomalie

1. Mettez l'interrupteur principal sur ARRÊT.
2. Débranchez le câble d'alimentation de la prise.
3. Contactez votre revendeur le plus proche.

Ne pas brancher le câble d'alimentation incorrectement ou le laisser être recouvert de poussière.

Cela pourrait nuire le câble d'alimentation.

PRUDENCE

Ne pas utiliser ce produit ailleurs que dans les zones industrielles.

- L’utiliser dans une zone résidentielle ou d'une zone à côté d'un quartier résidentiel pourrait nuire à la réception des radios, téléviseurs, téléphones, etc.
- Ne donnez pas de choc à la surface d’un produit en verre.

- S'il vous plaît ne pas jouer à ce jeu.
  - Quand vous buvez;
  - Lorsque votre condition physique n'est pas normale;
  - Lorsque vous êtes dans une période de grossesse;
  - Lorsque vous avez un contrôleur d'impulsion;
  - Lorsque vous avez récemment subi une crampe ou évanouissement en regardant la télévision.
- Évitez une force excessive / un choc pendant la lecture / de déplacer le jeu.
- Quand vous jouez les jeux, faite attention aux alentours.

Ne pas brancher ou débrancher le câble d'alimentation avec les mains mouillées.

Dans la manipulation du câble d'alimentation, suivez les instructions ci-dessous.

- Ne pas endommager le câble d'alimentation.
- Ne pas plier le câble d'alimentation de manière excessive.
- Ne pas chauffer le câble d'alimentation.
- Ne pas lier le câble d'alimentation.
- Ne pas prendre en sandwich le câble d'alimentation.
- Ne pas modifier le câble d'alimentation.
- Ne tordez pas le câble d'alimentation.
- Ne tirez pas sur le câble d'alimentation.
- Ne montez pas sur le câble d'alimentation.
- Ne pas mettre un clou dans le câble d'alimentation.

Si la fiche du câble d'alimentation ou est endommagé, cessez immédiatement d'utiliser la machine et demandez à votre revendeur le plus proche de remplacer les pièces.

PRÉCAUTION D’EMPLOI

⚠ ATTENTION

Assurez-vous de consulter un spécialiste de l'industrie lors de la mise en place, du déplacement ou le transport de ce produit.

- Ce produit ne doit pas être mis en place, déplacé ou transporté par une quelconque autre qu'un spécialiste de l'industrie.
- Lors de l'installation de ce produit, installez 4 niveleurs de pieds uniformément sur le sol et assurez-vous que le produit est installé de façon stable dans une position horizontale. Une installation instable peut entraîner des blessures ou un accident.
- Lors de l'installation de ce produit, ne pas appliquer une force excessive sur les pièces mobiles. Sinon, des blessures et des accidents peuvent y résulter, ou le produit peut être endommagé.

La machine pour une utilisation en intérieur uniquement, ne pas installer à l'extérieur.

N’installez pas la machine de jeu près des issues de secours.

Protéger la machine de jeu de:

- L’humidité ou la pluie.
- La lumière directe du soleil.
- La chaleur directe de la climatisation et du chauffage, etc...
- Des substances inflammables dangereuses.
- Sinon, un accident ou un dysfonctionnement.

Ne pas placer les récipients contenant des produits chimiques ou de l'eau sur ou près de la machine de jeu.

Ne placez pas d'objets à proximité des orifices de ventilation.

Ne pas plier le cordon d'alimentation par la force ou de placer des objets lourds au-dessus.

Ne jamais brancher ou débrancher le cordon d'alimentation avec les mains mouillées.

Ne jamais débrancher la machine de jeu en tirant le câble d'alimentation.

⚠ PRUDENCE

Veillez à utiliser le câblage intérieur selon les exigences de tension spécifiées. Pour une rallonge, utilisez la notation spécifiée ou plus.

Veillez à utiliser le cordon d'alimentation fourni.

Ne jamais brancher plus d'un cordon à la fois dans la prise électrique.

Ne pas poser le cordon d'alimentation où les gens marchent à travers.

Soyez sûr de mettre à la terre ce produit.

Ne pas exercer une force excessive lors du déplacement de la machine.

Pour une ventilation correcte, garder la machine de jeu 100mm (4 ") loin des murs.

Ne pas modifier les réglages des commutateurs DIP liées au système.

PRÉCAUTION D’EMPLOI

⚠ ATTENTION

Veillez à éteindre l'interrupteur d'alimentation principale et débranchez le cordon d'alimentation de la prise avant d'inspecter ou de nettoyer la machine.

Lors du remplacement des pièces, veillez à utiliser une partie des spécifications correctes.
Ne jamais utiliser de pièces autres que celles spécifiées.

L’ouverture à l'intérieur de la machine doit être effectuée par le spécialiste de la machine seulement, comme le courant électrique élevé est transmis à l'intérieur. Pour la machine de jeu avec le moniteur, un soin doit être pris lors de l'ouverture de sa porte arrière. Si non, une détérioration des pièces à l'intérieur ou à l'écran peut se produire.

Si l'interrupteur secondaire du panneau de service est éteint sans éteindre le commutateur d'alimentation principale de l'unité d'alimentation, certaines parties dans les unités restent sous tension. Lors de l'ouverture de la porte arrière, veillez à éteindre l'interrupteur d'alimentation principale et débranchez le cordon d'alimentation de la prise.

Il est strictement conseiller de s’abstenir de démonter et de réparer des pièces qui ne sont pas indiqués dans ce manuel, ainsi que les paramètres et le remodelage.

Pour nettoyer la machine de jeu, l'essuyer avec un chiffon doux imbibé avec un détergent neutre.

- L’utilisation plus mince d'un autre solvant organique ou de l'alcool peut décomposer le matériel.
- Un choc électrique ou une défaillance de l'équipement pourraient être causés par la pénétration de l'eau à l'intérieur de la machine.

⚠ PRUDENCE

Les composants de la machine de jeu sont sensibles aux vibrations et aux chocs. Il faut faire attention lors du déplacement et le transport de la machine de jeu.
Veillez à ne pas laisser la machine se renverser.

Avant de déplacer la machine, veillez à éteindre l'interrupteur d'alimentation principale, débranchez le cordon d'alimentation de la prise et débranchez le cordon d'alimentation de la machine.

Avant de déplacer la machine, la mettre hors des niveleurs et le déplacer sur les roulettes.

Éviter une force excessive lors du déplacement de la machine.

PRÉCAUTIONS LORS DU MANIEMENT

- Lors de la mise en place, l'inspection, l'entretien, déplacement ou le transport de ce produit, suivez les procédures et les instructions énoncées dans ce manuel et effectuer ce travail en toute sécurité.
- Ne pas mettre en place, manipuler, inspecter, entretenir, déplacer ou transporter ce produit dans des conditions équivalentes à l'état de "ATTENTION" ou "PRUDENCE" spécifiée dans ce manuel.
- ISi un nouveau propriétaire obtient ce produit à la suite d’un transfert, etc., soyez sûr de donner ce manuel au nouveau propriétaire.

CONTENTS

1. SPECIFICATION AND DIMENSION P02

1-1. DIMENSION P02

1-2. SPECIFICATION P02

1-3. NAME OF PARTS P03

1-4. STICKER LOCATION P04

1-5. COMPONENTS P04

2. INSTALLATION P05

2-1. INSTALLATION SPACE P05

2-2. PRECUTIONS FOR P05

2-3. READER AND CARD READER REPLATED BILLS P05

2-4. HOW TO INSTALL BILLBOARD P06

2-5. HOW TO INSTALL BUTTON FRAME P07

3. SETUP SETTING P08

3-1. MACHINE SETUP P08

3-2. STATUS MODE P09

3-3. SETUP MODE P11

3-4. TEST MODE P14

3-5. ERROR CODE P19

4. TROUBLESHOOTING P22

4-1. STEPPING MOTOR PROBLEM [EE-12] P22

4-2. TARGET WHEEL SENSOR PROBLEM [EE-12] P23

4-3. PRIZE OUT DOOR MOTOR PROBLEM [EE-AC or S1 or S2] P24

4-4. PRIZE OUT DOOR SWITCH PROBLEM [EE-AC ,S1, S2] P26

4-5. PRIZE DISPENSER [LOADER] MOTOR PROBLEM [EE-Fn rn] P27

4-6. PRIZE DISPENSER [LOADER] SWITCH PROBLEM [EE- Fn] or rn or ln F: FRONT, r : REAR, | : BOTH, n : HOLE NUMBER P29

4-7. Y MOTOR PART [PUSHER BOX] (FORWARD, BACKWARD) Y MOTOR PROBLEM [EE 06 08] P31

4-8. Y MOTOR PART [PUSHER BOX] Y MOTOR SWITCH PROBLEM [EE 06 08] P32

4-9. CREDIT FND - BUTTON LED - BILLBOARD ASS'Y LED PROBLEM P34

4-10. TARGET ACRYL SIDE LED 4EA - TARGET CENTER LED PROBLEM P35

4-11. LCD POWER IS PROBLEM P36

5. EXPLODED VIEW P37

5-1. MAIN CABINET PART P37

5-2. BILLBOARD PART P38

5-3. TAEGET DISPLAY PART P39

5-4. PRIZE OUT DOOR PART P40

5-5. PRIZE DISPENSER PART_TOP P41

5-6. PRIZE DISPENSER PART_MIDDLE P42

5-7. PRIZE DISPENSER PART_BOTTOM P43

5-8. BUTTON FRAME PART P44

5-9. POWER BOX PART P45

5-10. AC INPUT PART P45

6. PART PICTURE P46

7. BLOCK DIAGRAM P50

1. SPECIFICATION AND DIMENSION

1-1. DIMENSION

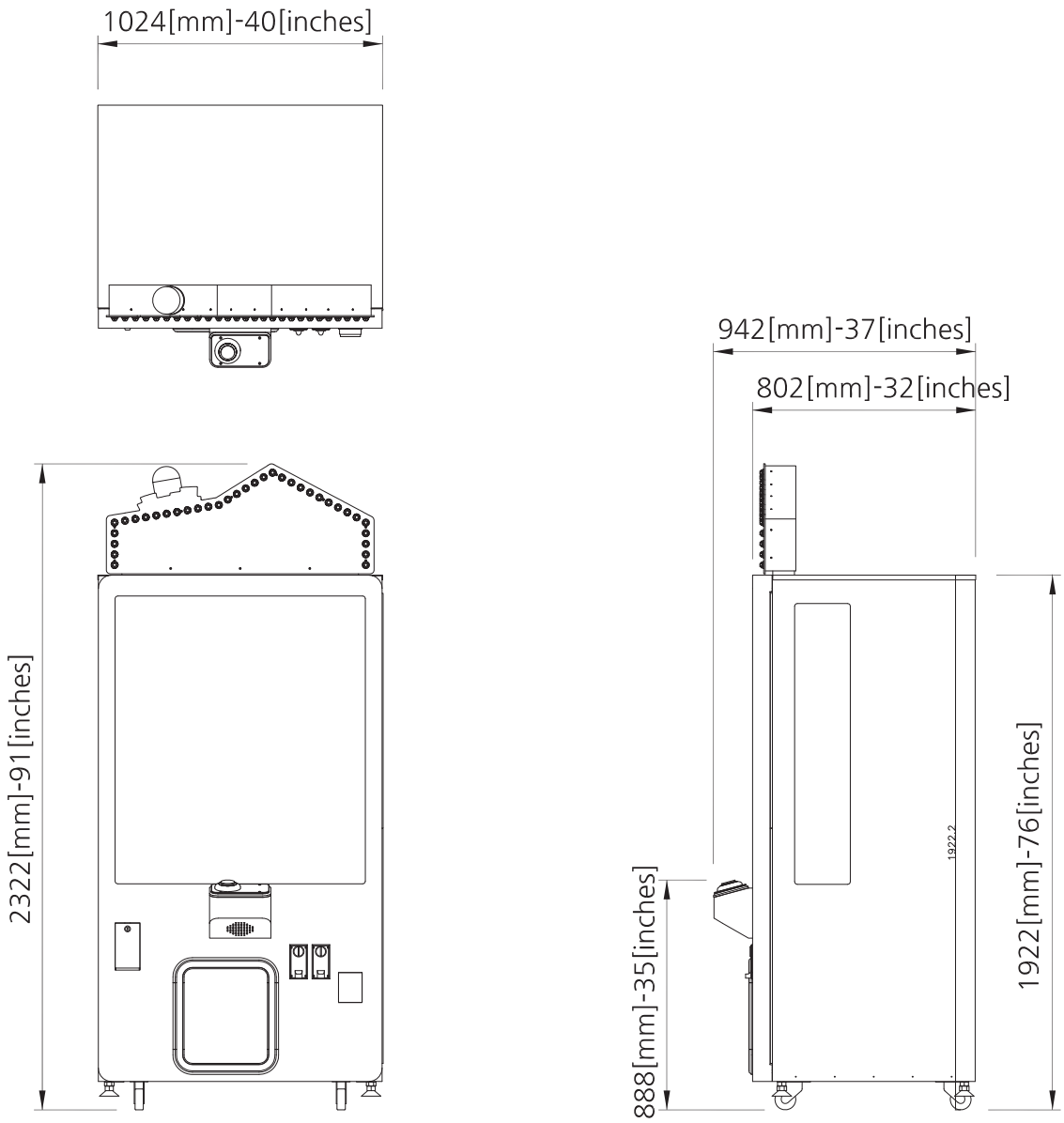

1-2. SPECIFICATION

DIMENSION (W x D x H)	1024 x 942 x 2322 (mm)	
PACKING DIMENSION (W x D x H)	1150 x 850 x 2260 (mm)	
WEIGHT (kg)	280 kg [WEIGHT INCLUDING PACKAGING : 310 kg]	
VOLTAGE	AC 120V	AC 230V
FREQUENCY RANGE	60Hz	50,60Hz
CONSUMPTION	300 W	300 W
CERTIFICATION	-	

1-3. NAME OF PARTS

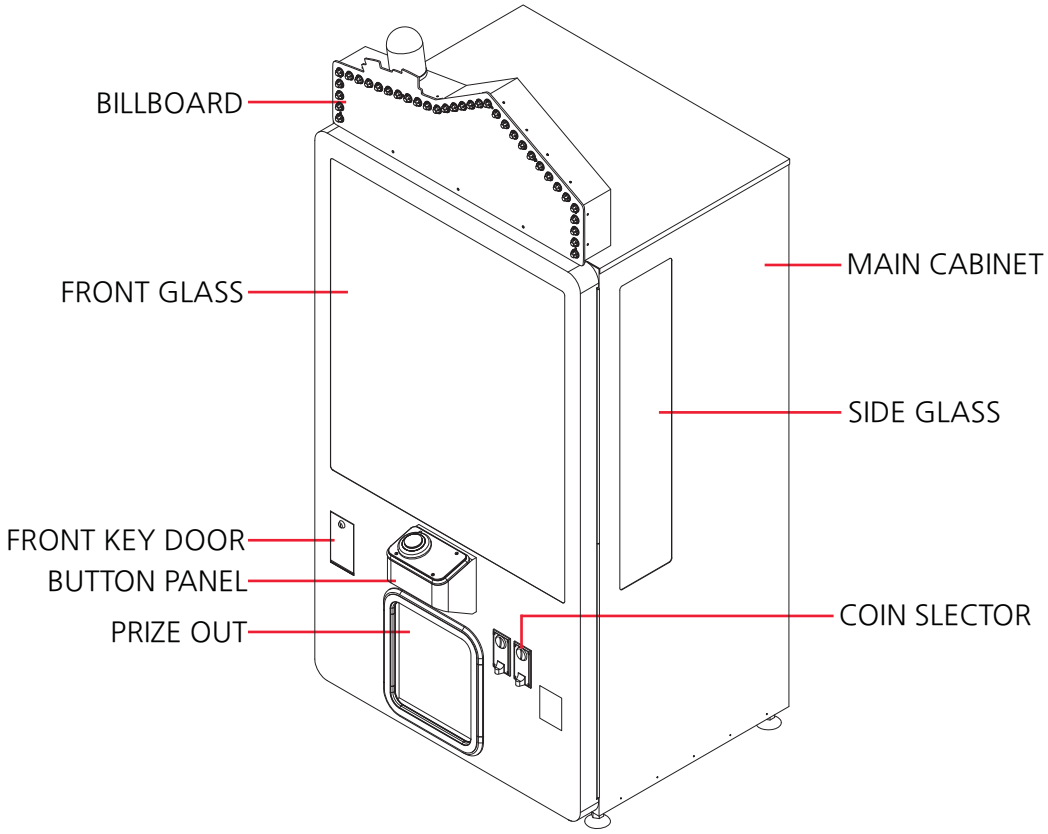

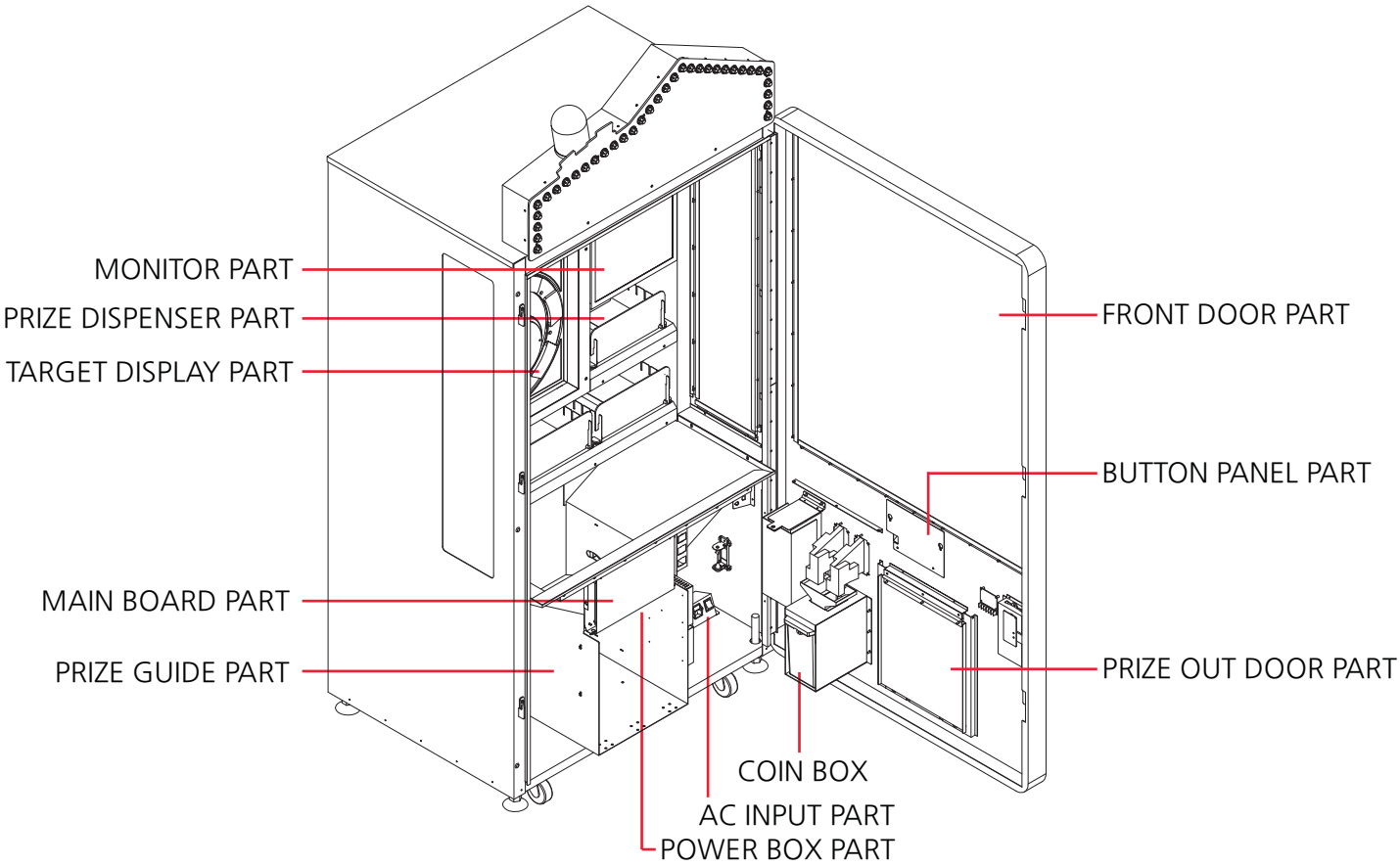

1-4. STICKER LOCATION

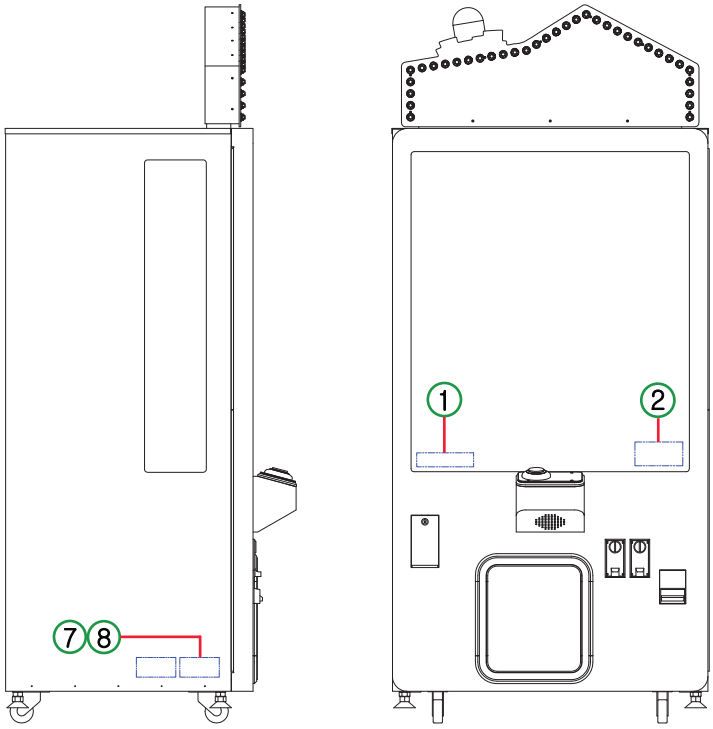

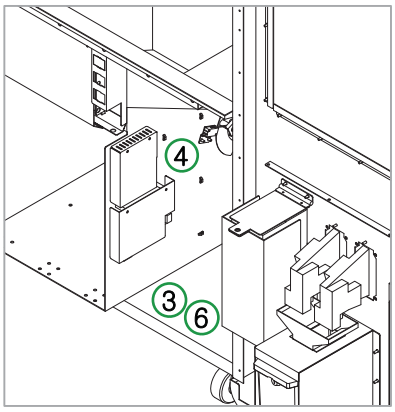

* SMPS PANEL

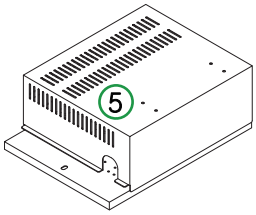

1

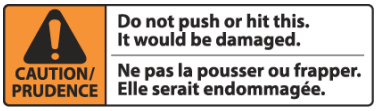

2

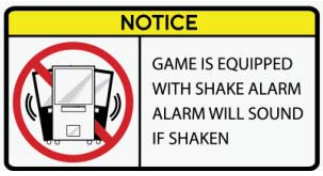

3

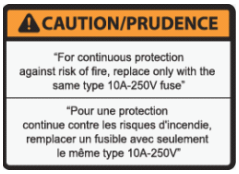

4

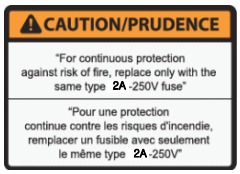

5

6

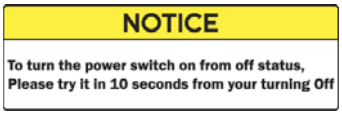

7

8

MODEL NAME	-
PRODUCT S/N	-
MAIN BOX S/N	-
LCD S/N	-
CERTIFICATE	-

MADE IN KOREA

Koyang-si, Kyounggi-do,Korea. Phone:82-31-909-2100

1-5. COMPONENTS

NO.	PART NAME	SPEC.	QTY
1	AC POWER CORD	-	1
2	KEY	6001	2
3	KEY	7001	2
4	BOLT	M6x16L	4
5	BOLT	M4x10L	7
6	WRENCH	2 / 2.5 / 4mm	1 EACH
7	COIN SELECTOR BLANK BKT	-	1
8	MANUAL	-	1
9	TROUBLE SHOOTING MANUAL	-	1

2. INSTALLATION

2-1. INSATALLATION

- Need to have installation place.
  Maintenance zone & Play zone should have at least
  2000mm x 2000mm each.

***IMPORTANT**

- Once you set up the machine with required game-play area, when installing this product, set the 4 leg levelers evevly on the floor and make sure that the product is installed stably in a horizontal position.

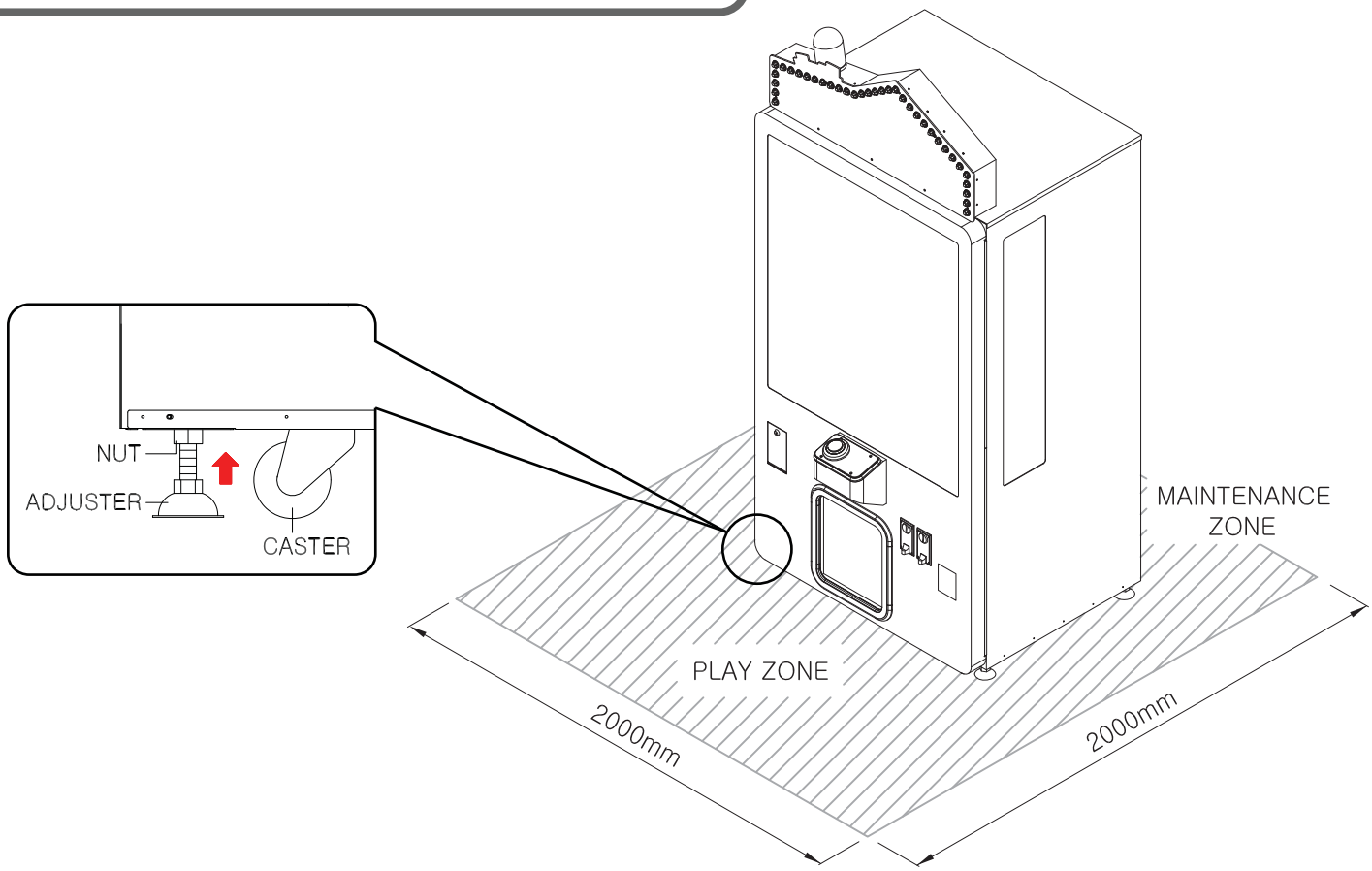

2-2. PRECAUTIONS FOR

* Optimum temperature for game operation is between -10°C to 45°C. Installing/operating the game outside given temperature range may cause malfunction or damages to the components.

2-3. READER AND CARD READER RELATED BILLS

- This machine can install Credit Card Reader or Bill Acceptor as an Option.

2-4. HOW TO INSATLL BILLBOARD

1

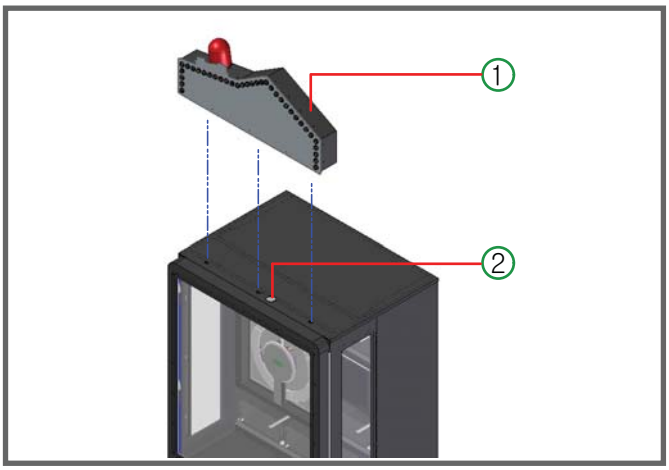

- After lifting up the ① billboard to the top of the cabinet, fix the bill board using 3 spots with M6 bolt.

  When fixing the billboard, push the connector into the hole of ②

2

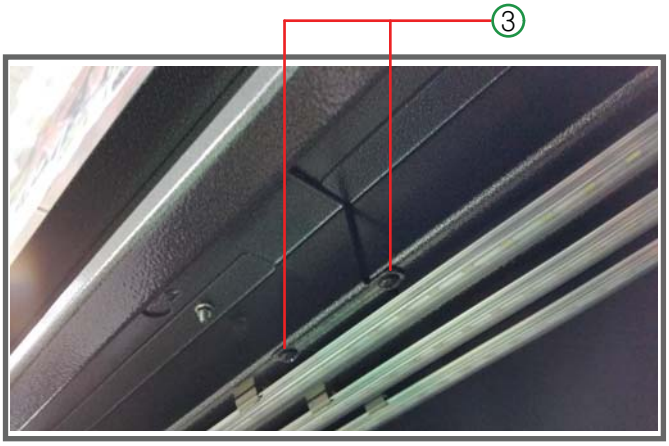

- After that, you will find ③ main cabinet support cover brackets when you open front door.

  Please disconnect M4 bolts in 2 spots using a tool.

3

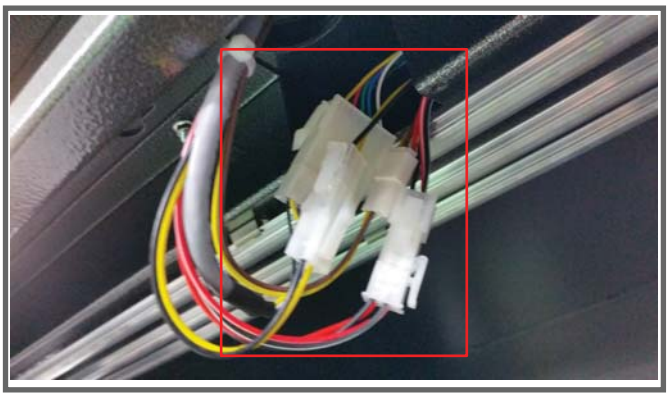

- After disconnecting M4 bolts, please connect the billboard connector with cabinet connector as shown in the photo.

4

- After re-assembling the ③ main cabinet support cover brackets, The installation of billboard will be finished.

2-5. HOW TO INSTALL BUTTON FRAME

1

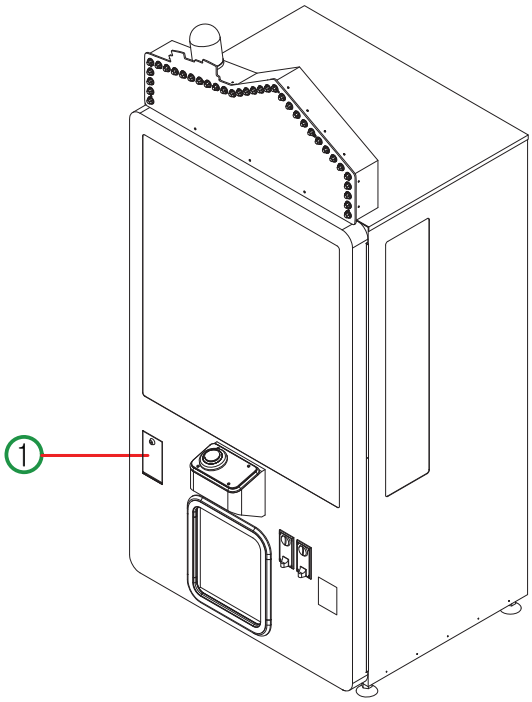

- 1 Open door using door key.

2

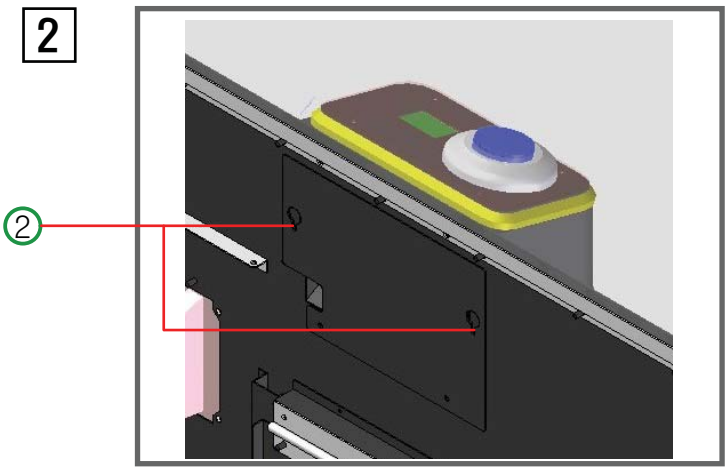

* BUTTON FRAME PART +
  FRONT DOOR BUTTON CASE REAR COVER

- After fasten bolt in Button panel Ass'y, hang it on cabinet using holes (2Ea: 2). Then fasten rest of bolts (M4 bolt x 4Ea). Connect main connector with cable from button panel ass'y.

3

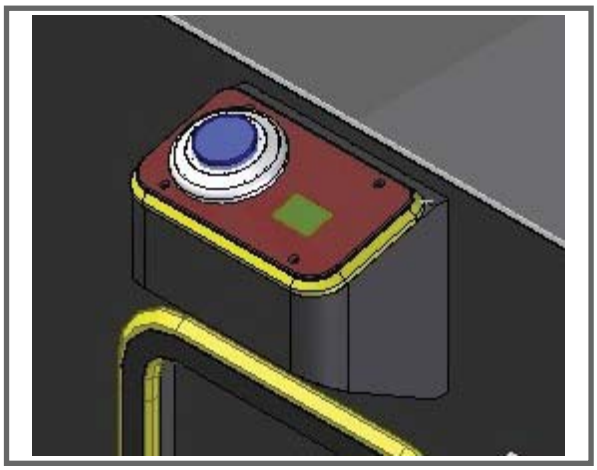

- Complete the Ass'y as shown picture.

3. SETUP SETTINGS

3-1. MACHINE SETUP

1. HOW TO ENTER SETUP MENU

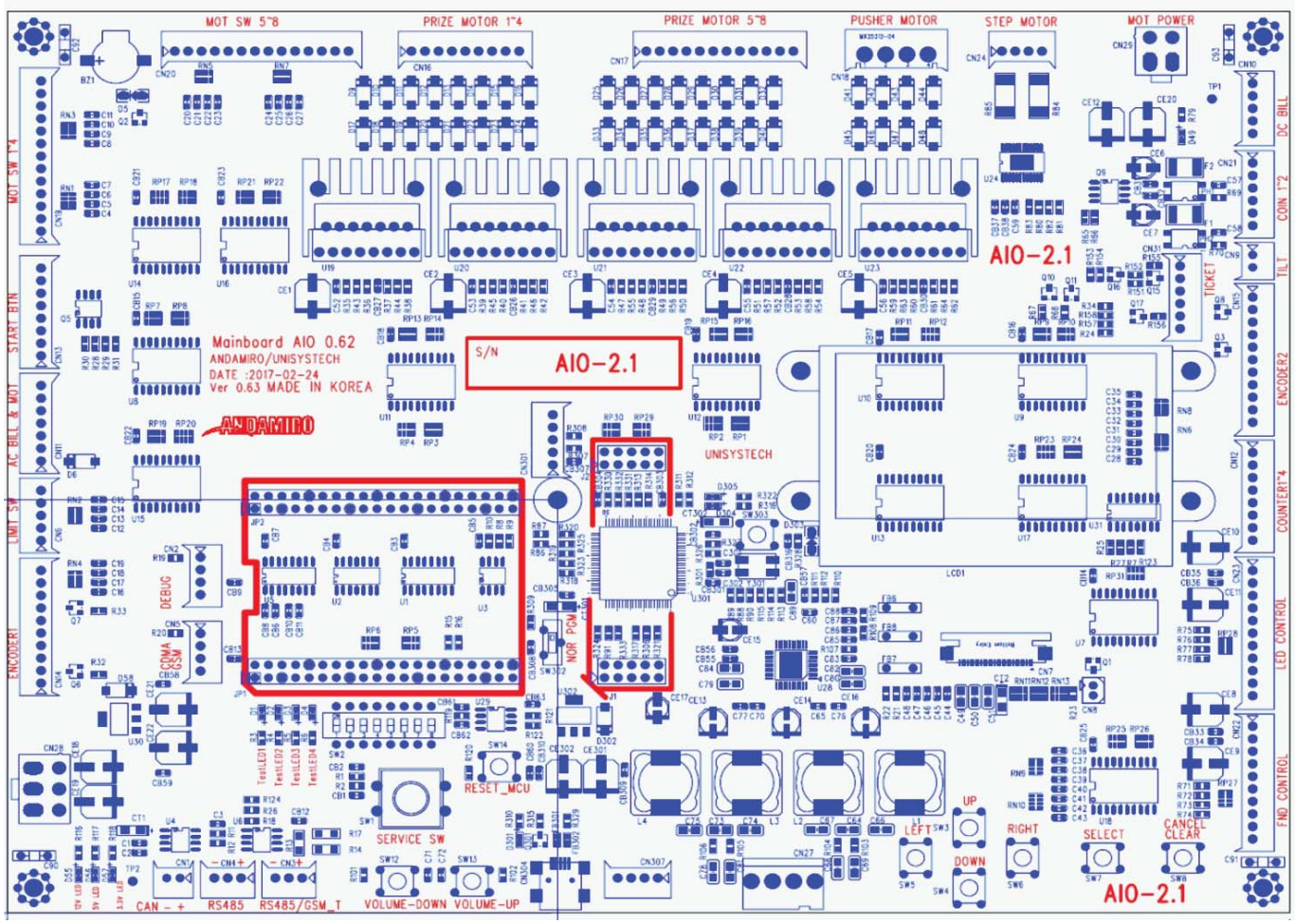

[MAIN PCB]

2. SOUND VOLUME

- On the left below of AIO(All-In_One) Mainboard, 2 buttons for Sound Volume of the game exist.
  Left button to lower volume, Right button to higher it.
  The basic set value is 88. It is adjusts by 2, you can set from 0~100.
  If you push the button on TOTAL STATUS Window, the Volume value shows as belowed Window in a moment and then come back to the original screen.

```
 * TOTAL STATUS *
V__x_ -----------------
      Volume :    88
```

3. SERVICE BUTTON

- On the below of CPU in AIO Mainboard, there is a button for providing the Free Credit or the Credit for Gaming in a case of Test.
  For each punching the button, Play Credit is increasing by 1. Counter Meter does not being increased.

4. SETUP LCD & SET BUTTON

- The SETUP LCD on the right side of AIO Mainboard has functions for checking the machine status or changing, saving and testing the suer set value.
  When you power on, below screen shows and Program Version displays.

```
**** SAFE CEACKER ****
V__x_ -- 0000000000
        V__x_
```

5. BUTTON INSTRUCTIONS FOR USE

- There are 6 buttons of UP/DOWN/LEFT/RIGHT/SELECT/CLEAR.
  ALL buttons can perform different fuctions depending on whether it's a short press or long-key (a long press & hold) on the button(s).

  [↑↓] Up/Down Button : After pressing SELECT Button, change value (-/+), ON/OFF change in case of pressing a button as long key, Changing Value becomes big.
  [← →] Left/Right Button : change set menu.
  SELECT Button : To select desired menu / changing Set Value
  CLEAR Button : To reset to Factory Setting / Calibration

* The First thing to do after installing a Safe Cracker and trying to operate it for the first time is to perform Calibration.
Calibration is testing the fuctions of components and can affect the seetting of the payout rates.
Calibration can be performed by Calibration of SET MENU.

3-2. STATUS MODE : DIPLAYING AT ALL TIME ON GAME

1. COIN COUNT

```
 * TOTAL STATUS *
V__x_ ---------------
    TODAY :        0
    TOTAL :        0
```

- 'TODAY' DISPLAYS THE INSERTED COINS AFTER OPERATORS INITIALIZE THE STATUS
  1) On the field, Operator can initialize by long-key on [Clear] Button
  2) Or by performing "Initialize setup"

'Total' is total inserted coins, It is impossible to erase and it can not be erased.

2. TOTAL PRIZE OUT : TOTAL GAME PLAYED TIMES

```
 * TOTAL STATUS *
V__x_ ---------------
TOTAL PRIZEOUT:00000
TOTAL PLAY    :0000000
```

- 'TOTAL PRIZE OUT' is total Quantity of Prizes out
  1) On the field, Operators can initialize by long-key on [CLEAR] button
  2) Or by performing "Initialize setup"

If it succeeds, the prize of allocated holes will be dispensed and 1 will be added when the Pusher bar comes back to origin point
'TOTAL PLAY' is total game played times, Bonus games also include.
It is impossible to erase and it can not be erased.

3. CREDIT COUNT

```
 * TOTAL STATUS *
V__x_ ----------------
    CREDIT   COUNT
       00    +00
```

- Displays a two-digit display, up Credit Limit set by the Set Menu. Front amount of 00 is actual inserted coins quatities, Rear amount of +00 is Service Coins quatinties.
The front panel displays the combined quantity of gaming Credit FND has.

4. HOLE GAME PERFORMING STATUS (1~7, BY ROW NUMBER)

* ROW STATUS:1 * V__x_--0000000000 PRIZE OUT TOTAL 0 00000	* ROW STATUS:2 * V__x_--0000000000 PRIZE OUT TOTAL 0 00000	* ROW STATUS:3 * V__x_--0000000000 PRIZE OUT TOTAL 0 00000
		* ROW STATUS:4 * V__x_--0000000000 PRIZE OUT TOTAL 0 00000
* ROW STATUS:5 * V__x_--0000000000 PRIZE OUT TOTAL 0 00000	* ROW STATUS:6 * V__x_--0000000000 PRIZE OUT TOTAL 0 00000	* ROW STATUS:7 * V__x_--0000000000 PRIZE OUT TOTAL 0 00000

Displays Prize Out q'ty of the holes and the attempted times of each hole.
Being switched to LOW with {Up}, {Dn} Button

5. TILT(SHAKE) ERROR COUNTS

```
 * ERROR TILT=00X *
V__x_ ----------------
    CREDIT   COUNT
       00    +00
```

X : Error Tilt error counts
Tilt Error is when the machine get some ouside shock. When Tilt gets contacts more than 1 time, Error Event will proceed for 10 secs and then transfer to the normal mode.
Press [CLEAR] button to initaialize the TILT ERROR count.

The machine will be initialized when credits remain.
If possible, please do not initialize the machine when credits remain. The machine will be initialized even when executing "Initial setup".

3-3. SET MENU : PRESS AND HOLD [SELECT] BUTTON IN STATUS MODE

1. VERSION DISPLAY

```
*SET   MENU *
 V__x_ ----------------
 **** SAFE CRACKER ****
  ANDAMIRO V__x_
```

2. PRIZELOADER REMOVE FUNCTION

In case of malfuction of PrizeLoader or parts such as MOTOR, FRONT/REAR SW, the fuction of PrizeLoader Module for as specific prize cell can be disabled.
In case players target the stopped hole, the pusher bar will return to home instead of moving forward at a whole stopped location of the hole concerned. Credit will be reduced by 1.

*SET MENU * V__x_--0000000000 Hole X-1 PrizeLoader Enabled	*SET MENU * V__x_--0000000000 Hole X-2 PrizeLoader Enabled	*SET MENU * V__x_--0000000000 Hole X-3 PrizeLoader Enabled
		*SET MENU * V__x_--0000000000 Hole X-4 PrizeLoader Enabled
*SET MENU * V__x_--0000000000 Hole X-5 PrizeLoader Enabled	*SET MENU * V__x_--0000000000 Hole X-6 PrizeLoader Enabled	*SET MENU * V__x_--0000000000 Hole X-7 PrizeLoader Enabled

1) "[Enabled]" displays, when you push [SELECT] Button and then enter into the funtion change mode.
2) Change the value with {∧},{∨}Button
3) On the screen, it displays as below. (Example 1 hole)

```
*SET   MENU *
[Disabled: 1          ]
   Hole X-1 PrizeLoader
         [Disabled]
```

4) Press [SELECT] button to disable the specified prize cell.
5) Is displayed on all the screen is still Prizebox.

```
  * TOTAL STATUS *
[Disabled: 1          ]
     TODAY :        0
     TOTAL :        0
```

6) In order to recover the function after repairing PrizeLoader, change the probability of the allocated hole into the value you want.

3. CHANGING CALIBRATION STARTING POSITION

```
*SET  MENU *
 V__x_ ----------------
   SrartPosition Offset
   Offset:        0
```

In calibration, you may adjust starting position if it's located right side of target.
1) Setting range is -20 ~ +20 (Default : 0).
2) Press [SELECT] button to access the menu. It displays as (Default : 0).
3) Change the Values by [Up],[Dn]Button.
   {Up} : Increase, {Dn} : Decrease
4) If you set (-) value, the origin point moves more left to the basic location. If you set (+) value, the origin point moves more right to the basic location.
5) Press [SELECT] button to save all changes.

4. 1 PLAY COIN NUMBER

```
*SET  MENU *
 V__x_ ----------------
   Credit      Set
     1 Credit   4 Coin
```

Set coin number for 1 Play, 1 coin = 25 ¢
※ You may set 1 Credt 2 Play. The setting is 2 Credit 4 Coin.

1) Default is 1 Play 1$, it is 4 in case of 4 Coin setting, It may change 1~10, 2 Credt 4 Coin.
2) Press [SELECT] Button to enter to the change mode, "[4]" displays.
3) Change the values by [Up],[Dn]Button.
   {Up} : Increase, {Dn} : Decrease
4) Press [SELECT] Button to save all changes.

5. 1 BILL COIN NUMBER

```
*SET  MENU *
 V__x_ ----------------
   Coin per Bill
      1-Bill= 4 Coin
```

Coin Pulse Number for 1 Bill, default is 4, It may change 1~20

1) Press [SELECT] Button to enter to the change mode, "[4]" displays.
2) Change the values by [Up],[Dn]Button.
   {Up} : Increase, {Dn} : Decrease
3) Press [SELECT] Button to save all changes.

6. CREDIT LIMIT SET

```
*SET  MENU *
 V__x_ ----------------
   Credit Limit
      Max Credit= 20
```

Default is 20, it may change1~ 100
Coin mech becomes "Inhibit" in case coin is inserted more than the setting.

7. PLAY TIME LIMIT SET

```
*SET  MENU *
 V__x_ ----------------
   Time Limit
          30  Sec
```

Set and change Game playing time for 1 Play. Default is 30, It may change 10~60.

8. DEMO SOUND

```
*SET  MENU *
 V__x_ ----------------
      Demo Sound
           On
```

Demo Sound On/Off set/change.
Default=On

9. EXAMPLE SETTING FOR PRIZELOADER ON GAME

```
*SET  MENU *
 V__x_ ----------------
   Prize Show-off
        On
```

Setting Modes for moving Pusher Bar on forward/backward in front of the PrizeLoader of allocated hole when you stop the push bar on any hole location on game.
- PrizeLoader example forward mode On/Off Setting.
- Default=Off (example function of moving forward a little and backward)

* Below 3 settings 10. attached GSM module No setting 11.GSM Message DATA transmitting term setting 12. Receiver Phone No setting Only applicable when you attache the communication module which is option item.
* In case of installig GSM Module in additon for communication function, you should reset all setting through performing Factory Initialize after changing CPU and rebooting the mahcine.

10. SAVE & EXIT

```
*SET  MENU *
 V__x_ ----------------
   Save & Cancel
    Press [SEL] & [CLR]
```

Press [SELECT]Button to save and exit.
Press long key [CLEAR]Button to exit without saving.

3-4. Press and hold UP & DOWN buttons at the same time to enter "TEST MENU" .

1. CHECKING HOLE POSITION(S)

```
* TEST MENU *
 V__x_ -------------
  Hole Check
     0  (CLR=Reset)
```

Press the [CLEAR] Button, first, at the bottom of the consoles has yeodat 4th Prize Door.

```
* TEST MENU *
V__x_ -------------
     PROGRESS...
```

[Acryl display[right below]_1H]
Hole check screen as like below, the succeed times of each hole is 2~4 times.
Only below 4 times are allowed

[Acryl display[right below]_3H]
Hole check screen as like below, the succeed times of each hole is 1~3 times.
Only below 4 times are allowed

```
* TEST MENU *
 V__x_ -------------
Hole: 1 2 3 4 5 6 7
CNT: 0 0 0 0 0 0 0
```

"Catn" displays on the front FND when you perform Calibration. "n" means the number of each hole.
When it is done, "do ne" displays.
In case of performing Calibration, if it is succeed at it's first try without failure or 2nd try, Error Event will be performed and "EE CA" Error Message shows on FND then the Game machine stops.
After turning off the machine, please perform the calibration again after adjusting Arrow or Acryl Panel.
Exit to upper menu mode by pushing [SELECT] BUTTON.

Notice 1 : When succeeding each hole at a first try without a failure or succeeding at a second try, the number of success of the related holes is displayed on the screen and the process of Error Event will start.
And then the machine stops after displaying Error Code "EE CA" on FND. Turn off the machine and adjust the Arrow, and then proceed with Calibration. The process is as above.

[Acryl display[right below]_1H]
Notice 2 : When the number of success of each hole exceeds 4 times, the number of success of the related hole is displayed on the screen and the process of Error Event will start. And then the machine stops after displaying Error Code "EE CA" on FND. Turn off the machine and check the condition of Arrow. Replace the Arrow if it is worn-out or damaged and then proceed with calibration.
The process is as above.

[Acryl display[right below]_3H]
Notice 2 : When the number of success of each hole exceeds 3 times, the number of success of the related hole is displayed on the screen and the process of Error Event will start. And then the machine stops after displaying Error Code "EE CA" on FND. Turn off the machine and check the condition of Arrow. Replace the Arrow if it is worn-out or damaged and then proceed with calibration.
The process is as above.

2. Prize Motor Test

```
* TEST MENU *
 V__x_ ----------------
  Prize Motor
      ALL  (CLR=PUSH)
```

*** Test each prize motor/switch installed on PrizeLoader dispensing Prizes.

1) Default is "ALL". If you press [CLEAR]Button, 7 motors in PrizeLoader operate at a time and move forward and test them. all of 7 PrizeLoaders stop when Front SW in PrizeLoader is switched.

```
* TEST MENU *
 V__x_ ----------------
  Prize Motor
      ALL  (CLR=PUSH)
```

To return back to the origin position, press [CLEAR]Button again. Then 7 motors in PrizeLoader move backward all of 7 PrizeLoaders stop when Rear SW in PrizeLoader is switched.
The test will repeat everytime when you press [CLEAR]Button.

2) Press [SELECT] Button to select PrizeLoader and then enter into PrizeLoader select mode. "[ALL]" displays.

3) When you press [CLEAR]Button after choosing PrizeLoader for testing by [Up],[Dn]Button, allocated PrizeLoader moves forward and perform the same process.

3. Pusher Box Motor/Sensor Test

```
* TEST MENU *
 V__x_ ----------------
  Motor Test
    Press SELECT Button
```

*** Testing all motors and sensors installed in Pusher Box by moving Pusher Box on left, right or front ,rear.

Press [SELECT] Button and next screen displays, It means Test Mode is activated, Prizeout Door is closed. Orinin position is recognized.

```
* TEST MENU *
 V__x_ ----------------
    -- S2 X0 RL -- --
   Press CLEAR TO Exit
```

1) Prize out Door Test

If you press start button on the status like picture, Prizeout door will be open and display S1. And press start button again, prizeout door will be closed and display S2.

S1 : Door Open SW ON, S2 : Door Close SW ON

2) Pusher Box Motor/Sensor Test

2-A) For Pusher box testing, button function for moving pusher box are as below

{<} : move left, {>} : move right
{Up} : forward, {Dn} : backward

2-B) Once a sensor perceives movement of pusher Box, relevant sensor will be displayed. Then next sensor will be activated. After moving again and if other sensors are recognized, the previous sensor will be shown as "-- "

2-C) 4 options display
X0: Origin Sensor, RL:Rear Sensor, ML: Middle Sensor(Fail), FL: Front Sensor(Success)

```
* TEST MENU *
 V__x_ ----------------
    S1 S2 X0 RL ML FL
   Press CLEAR TO Exit
```

4) After finishing Motor/Sensor Test, press [CLEAR]Button and then move to [Motor Test] menu screen.

4. Led Test

```
* TEST MENU *
V__x_ -----------------
LED = Off
Press SEL/Left/Right
```

*** Test menu for LED.

Press [SELECT] button to move to the screen below, then test mode will be activated.

```
* TEST MENU *
V__x_ -----------------
LED = [BLACK ]
Press SEL/Left/Right
```

RED/GREEN/BLUE/WHITE/MAGENTA/CYAN/YELLOW/BLACK will be displayed step by step when you press [RIGHT] button.

Press [SELECT] button to stop testing LED and return to the top menu.

5. Media Test

```
* TEST MENU *
V__x_ -----------------
LCD/LED,Sound= Off
Press SEL/Left/Right
```

*** Test menu for LCD/LED/FND and Sound.

Press [SELECT] button to move to the screen below, then test mode will be activated.

```
* TEST MENU *
 V__x_ -----------------
 LCD/LED,Sound=[Off]
 Press SEL/Left/Right
```

1) LCD Monitor / LED, FND Test
   RED/GREEN/BLUE/WHITE, Time, Error=99 ... will be displayed on LCD / LED step by step.
   Number 0~9 will be displayed on FND in order.

2) Sound Test
   Press [Right] button from the above screen to play sounds from speaker, displaying Sound=[001].
   Press [Right] button again to change sound list.

Press [SELECT] button to stop testing LCD / LED / FND and return to the top menu.

6. Counter Test

```
* TEST MENU *
 V__x_ -----------------
 Left-CNT1   Right-CNT2
 Press Left/Right BTN
```

*** Test 2 Counters, Coin Counters and Prize counter.
Screen is as below.

When you press [Left] button, coin counter number will be increased by 1.
Press [Right] button to increase prize counter by 1.

Please note the increased number cannot be returned.

7. FACTORY INITIALIZE

```
* TEST MENU *
 V__x_ -----------------
Factory Initialize
   Press CLEAR Button
```

*** All setting becomes the factory default status and then perform Calibration.

Press the [CLEAR] Button, first, at the bottom of the consoles has yeodat 4th Prize Door.

```
* TEST MENU *
V__x_ -------------
     PROGRESS...
```

[Acryl display[right below]_1H]
Hole check screen as like below, the succeed times of each hole is 2~4 times.
Only below 4 times are allowed

[Acryl display[right below]_3H]
Hole check screen as like below, the succeed times of each hole is 1~3 times.
Only below 4 times are allowed

```
* TEST MENU *
 V__x_ -------------
Hole: 1 2 3 4 5 6
CNT: 0 0 0 0 0 0
```

"Catn" displays on the front FND when you perform Calibration.
"n" means the number of each hole. When it is done, "do ne" displays.
In case of performing Calibration, if it is succeed at it's first try without failure or 2nd try, Error Event
will be performed and "EE CA" Error Message shows on FND then the Game machine stops.
After turning off the machine, please perform the calibration again after adjusting Arrow or Acryl Panel.
Exit to upper menu mode by pushing [SELECT] BUTTON.

Notice 1 : When succeeding each hole at a first try without a failure or succeeding at a second try,
the number of success of the related holes is displayed on the screen and the process of Error Event will start.
And then the machine stops after displaying Error Code “EE CA” on FND. Turn off the machine and adjust the Arrow, and then proceed with Calibration. The process is as above.

[Acryl display[right below]_1H]
Notice 2 : When the number of success of each hole exceeds 4 times, the number of success of the related hole is displayed on the screen and the process of Error Event will start. And then the machine stops after displaying Error Code "EE CA" on FND. Turn off the machine and check the condition of Arrow. Replace the Arrow if it is worn-out or damaged and then proceed with calibration.
The process is as above.

[Acryl display[right below]_3H]
Notice 2 : When the number of success of each hole exceeds 3 times, the number of success of the related hole is displayed on the screen and the process of Error Event will start. And then the machine stops after displaying Error Code "EE CA" on FND. Turn off the machine and check the condition of Arrow. Replace the Arrow if it is worn-out or damaged and then proceed with calibration.
The process is as above.

8. INITIALIZING SET-UP VALUES

```
* TEST MENU *
V__x_ ----------------
Initialize Setup
  Press CLEAR Button
```

*** Initialize all settings of "Set Menu" and some game data.

Press [CLEAR] Button, all settings in "Set Menu" and some game data are initialized.
Calibration/Total is not affected.

9. SAVING THE TEST MENU AND EXIT

```
* TEST MENU *
V__x_ ----------------
   Save & Cancel
  Press [SEL] & [CLR]
```

Press [SELECT]Button. Save setting and exit.
Press [CLEAR]Button with Long-Key. Exit without saving.

3-5. ERROR CODE

In case error occurs in the middle of machine operating, Super Star show ERROR CODE, ON MACHINE FRONT FND.
ERROR CODE, DESCRIPTION AND TROUBLE SHOOTNG ARE AS BELOW.

ERROR CODE	CONTENT	STATUS
1. EE-12	Home(Origin) Return Error - This Error code is generated in case of you cannot check the origin point due to origin point switch error or motors malfuction because the origin switch should be detected when you turn on the power or PusherBox returns back to origin point(Home) during the machine operation. Check and change the Origin switch or motor connected with PusherBox on back side of taregt Acryl inside of the machine.	ERROR EVENT, STOP
2. EE-AC	Prize Out Door Error (In case all switches are pressed or no checking) - This Error code is generated in case of the prize door is closed when you turn on the power or the prize door is not working because the Prize door on the down side of the game should be opened and closed to dispense the prize when a game succeeds. Check and change the switch or motor connected with Prize Door.	ERROR EVENT, STOP

3. EE 52	Prize Out Door Close S/W. Error - This Error code is generated in case of the prize door is not stoped at normal position or not working properly. In case of the prize door is closed when you turn on the power or when the game is succed, prize door on the down side of machine should be closed after dispensing the prize.	ERROR EVENT, STOP
4. EE 51	Prize Out Door Open S/W. Error - This Error code is generated in case of the prize door on the down side of the machine is not opening properly when you turn on the power or in case of game success because the prize door should be opened when Prize-Loader dispens the prize. Check and change the motor connected with Prize Door or the switch on open location (Rear SW.)	ERROR EVENT, STOP
5. EE-Ln	PrizeLoader Front S/W, Rear S/W Error n:Hole no. 1. When power is on. Front and Rear SW of Prizeloader are checked together in the process of initializing, 2. Front and Rear SW of Prizeloader are checked together on game mode or demo mode. 3. check and change the Front SW., Rear SW. the allocated prizeLoader.	ERROR EVENT, STOP
6. EE-Fn	PrizeLoader Front S/W or Motor Error n: Hole No. - This Error code is generated in case of a prize is not dispensed when a game succeeds and then the prize loader forwards in order to dispense the prize. Check and Change the motor on the back of PrizeLoader	ERROR EVENT, STOP
7. EE-rn	PrizeLoader Rear S/W or Motor Error n: Hole No. - This error code is generated when you cannot check the origin point due to motor faulty or origin switch faulty because origin switch should be detected by returning back to origin point after the prizeloader dispenses a prize in case game succeeds or prizeloader is located at origin point when power is off.	ERROR EVENT, STOP
8. EE-06	Pusherbox Front/Back Moving Error, REAR SW ERROR - This Error code is generated in case of the bar of Pushbar succeeds but does not return back to Player direction after moving forward to the inner side. Check and Change the motor or the switch in the Pushbox.	ERROR EVENT, STOP
9. EE-08	Pusherbox Front/Back Moving Error, FRONT SW ERROR - This error code is generated in case the bar of pusher box does not retrun back to player direction cause the bar should be at plyer direction after moving forward when power is on or the machine is on operating. PusherBox Check and change inside motor or Front SW.	ERROR EVENT, STOP
10. EE-15	TILT Error - This Error code is generated in case of the machine is shaked or shocked. The machine will operate normally after performing the Error Event for 10 seconds.	

11. EE-16	- EE-16 / Success SW. ERROR 1. Stop game play and display error when it sensor in front of limit sensor or block sensor after game start until before pushing. 2. Stop game play and display error when it sensor back switch, in front of limit sensor or in front of block sensor in normal.	ERROR EVENT, STOP
12. EE-CA	- Calibration ERROR Notice 1 : When succeeding each hole at a first try without a failure or succeeding at a second try, the number of success of the related holes is displayed on the screen and the process of Error Event will start. And then the machine stops after displaying Error Code "EE CA" on FND. Turn off the machine and adjust the Arrow, and then proceed with Calibration. The process is as above. Notice 2 : When the number of success of each hole exceeds 6 times, the number of success of the related hole is displayed on the screen and the process of Error Event will start. And then the machine stops after displaying Error Code "EE CA" on FND. Turn off the machine and check the condition of Arrow. Replace the Arrow if it is worn-out or damaged and then proceed with calibration. The process is as above.	ERROR EVENT, STOP

4. TROUBLESHOOTING

* General check up : Check the supply voltage and wiring connection properly
* "NO" : Means faulty of the check up result.

4-1. STEPPING MOTOR PROBLEM [EE-12]

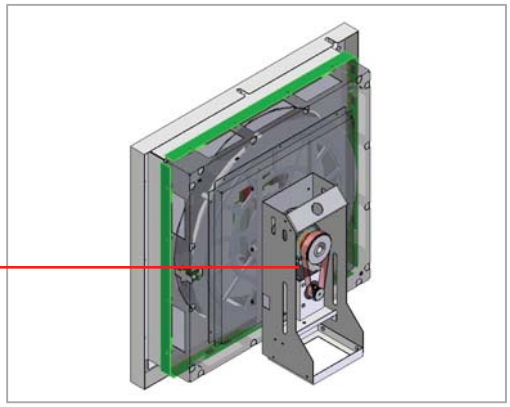

STEPPING MOTOR PROBLEM [EE-12]

STEPPING MOTOR TEST — YES → END

NO →

[HOW TO TEST]
1. TEST MODE
   # AFTER ENTERING MOTOR TEST MENU, CHECK STEPPING MOTOR STATUS BY PRESSING LEFT/RIGHT SWITCH OF MAIN PCB

CHECK STEPPING MOTOR — NO → 1. ADJUST TENSION OF BELT; 2. ADJUST OR REPLACE DRIVING PARTS

YES →

[HOW TO CHECK]
1. TIMING BELT IS ATTACHED?
2. BOTTOM OF STEPPING MOTOR AND TOP OF TIMING BELT IS WELL FIXED?
3. CHECK THE TENSION OF TIMING BELT
4. TARGET WHEEL IS POSSIBLE TO SPIN BY HAND WHEN THE MACHINE IS OFF?

CHECK MAIN PCB — NO → 1. RECONNECT THE CONNECTOR

YES →

[HOW TO CHECK]
1. CHECK CONNECTION OF CONNECTOR CN24
2. CHECK CONNECTION OF JOIN CONNECTOR

REPLACE STEPPING MOTOR — NO → 1. REPLACE MAIN PCB

END

- CODE NO.
  [MZZZ0MOT064]

- CODE NO.
  [AZZZ0PCB146]

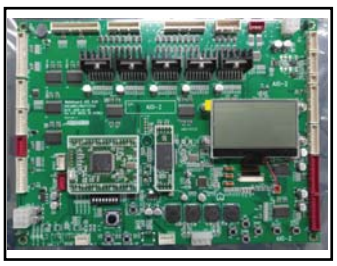

* General check up : Check the supply voltage and wiring connection properly
* "NO" : Means faulty of the check up result.

4-2. TARGET WHEEL SENSOR PROBLEM [EE-12]

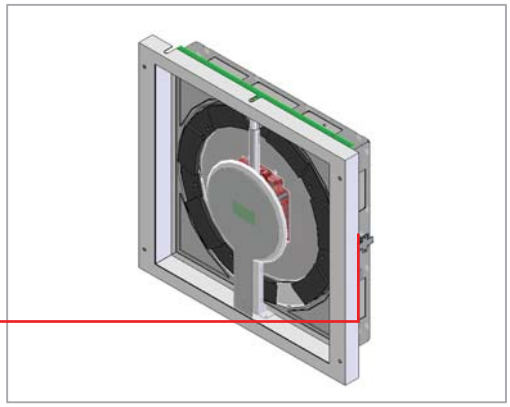

TARGET WHEEL SENSOR PROBLEM [EE-12]

CHECK TARGET WHEEL SENSOR — YES → END

NO →

[HOW TO TEST]
1. CHECK IF THE CENTER BETWEEN NO.7 HOLE AND NO.1 HOLE STOP AT 12 O'CLOCK POSITION WHEN THE MACHINE IS ON.
2. CHECK IF THERE IS ANY DEBRIS IN WHEEL BRACKET HOLE.
3. CHECK THE POSITION OF WHEEL BRACKET AND ENCODER SENSOR.

CHECK MAIN PCB — NO →
1. RECONNECT THE CONNECTOR
2. REPLACE MAIN PCB

YES →

[HOW TO CHECK]
1. CHECK CONNECTION OF CONNECTOR CN14
2. CHECK VOLTAGE OF CONNECTOR CN14 DC PIN 6: 5V , PIN 10: GND
3. CHECK CONNECTION OF JOIN CONNECTOR

CHECK TARGET WHEEL SENSOR — NO →
1. RECONNECT THE CONNECTOR

YES →

[HOW TO CHECK]
1. CHECK CONNECTION OF ENCODER SENSOR INPUT CONNECTOR
2. CHECK INPUT DC VOLTAGE OF ENCODER SENSOR
PIN 1: 5V, PIN 4 : GND

REPLACE ENCODER SENSOR PCB

NO →

REPLACE MAIN PCB

END

- CODE NO.
[AZZZ0PCB103]

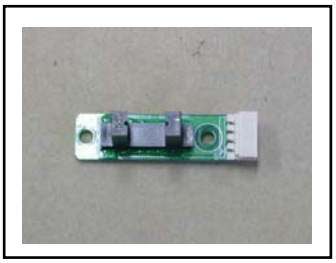

- CODE NO.
[AZZZ0PCB146]

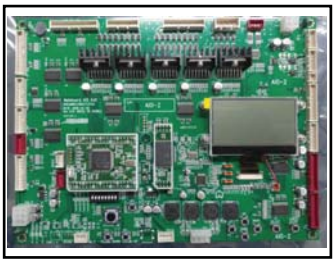

* General check up : Check the supply voltage and wiring connection properly
* "NO" : Means faulty of the check up result.

4-3. PRIZE OUT DOOR MOTOR PROBLEM [EE-AC or S1 or S2]

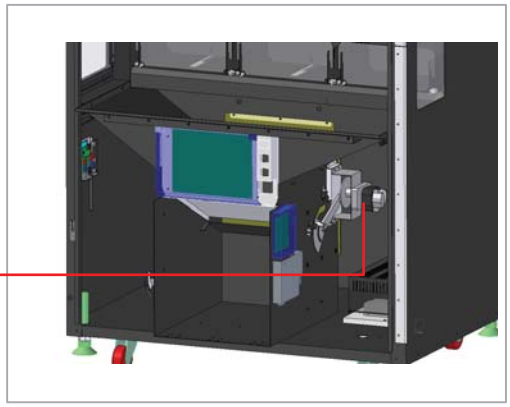

PRIZE OUT DOOR MOTOR PROBLEM [EE-AC or S1 or S2]

AC MOTOR(PRIZE OUT) TEST

YES → END

NO →

[HOW TO TEST]
1. TEST MODE
   # AFTER ENTERING MOTOR TEST MENU, TEST BY PRESSING START BUTTON

CHECK AC MOTOR(PRIZE OUT)

NO →

1. REPLACE AC MOTOR
2. ADJUST OR REPLACE DRIVING PARTS

- CODE NO. [MZZZ0MOT097]-120V
- CODE NO. [MZZZ0MOT071]-220V

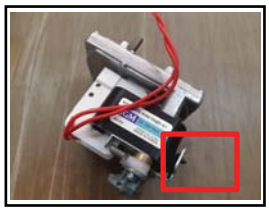

YES →

[HOW TO CHECK]
1. CHECK IF THE SPRING ON AC MOTOR IS ON POSITION
2. CHECK IF AC MOTOR BREAK BKT IS POSSIBLE TO MOVE BY HAND. (GRAY METAL)
3. CHECK IF DRIVING PARTS OF PRIZE OUT ARE LOOSEN

CHECK MAIN PCB

NO →

1. RECONNECT THE CONNECTOR
2. REPLACE MAIN PCB

- CODE NO. [AZZZ0PCB146]

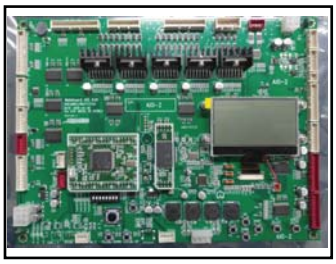

YES →

[HOW TO CHECK]
1. CHECK CONNECTION OF CONNECTOR CN11
2. CHECK DC VOLTAGE OF CONNECTOR CN11
   PIN 1 : 5V, PIN 4 : GND
3. CHECK DC VOLTAGE AROUND 2 SECONDS BY PRESSING START BUTTON
   PIN 5 : 5V, PIN 4 : GND
4. CHECK CONNECTION OF JOIN CONNECTOR

CHECK AC MOTOR PCB

NO → 1. RECONNECT THE CONNECTOR
2. RECONNECT WIRES IN TERMINAL BLOCK

[HOW TO CHECK]
1. CHECK CONNECTION OF CONNECTOR CN1(AC IN)
2. CHECK PIN1&3 AC VOLTAGE OF CONNECTOR CN1(AC IN). 120V or 220V
3. CHECK FUSE CONDITION AND IT IS 2A
4. CHECK CONNECTION OF CONNECTOR CN2
5. CHECK DC VOLTAGE OF CONNECTOR CN2
PIN 1 : 5V, PIN 4 : GND
6. CHECK DC VOLTAGE AROUND 2 SECONDS BY PRESSING START BUTTON
PIN 5 : 5V
7. CHECK CONNECTION OF CONNECTOR CN3
8. CHECK PIN 1&3 AC VOLTAGE OF CONNECTOR CN3 AROUND 2 SECONDS BY PRESSING START BUTTON (120V or 220V)

YES

REPLACE AC MOTOR

- CODE NO.
[MZZZ0MOT097]-120V
- CODE NO.
[MZZZ0MOT071]-220V

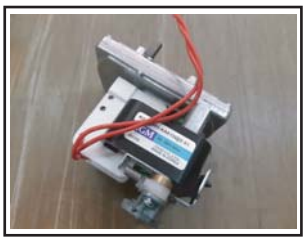

NO

REPLACE AC MOTOR PCB

- CODE NO.
[AICU0PCB007]

NO

REPLACE MAIN PCB

- CODE NO.
[AZZZ0PCB146]

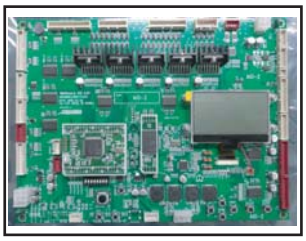

END

* General check up : Check the supply voltage and wiring connection properly
* "NO" : Means faulty of the check up result.

4-4. PRIZE OUT DOOR SWITCH PROBLEM [EE-AC ,S1, S2]

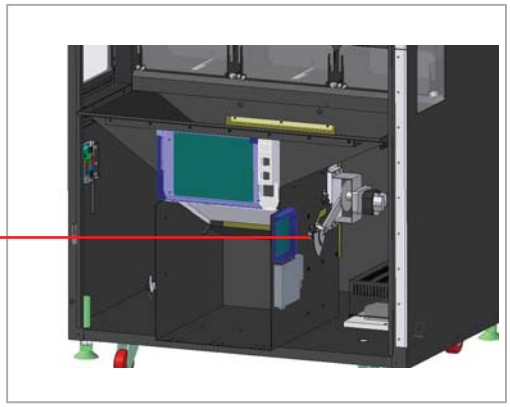

PRIZE OUT DOOR SWITCH PROBLEM [EE-AC ,S1, S2]

PRIZE OUT DOOR SWITCH TEST

YES → END

NO →

[HOW TO TEST]
1. TEST MODE
AFTER ENTERING MOTOR TEST MENU, CHECK IF LCD SCREEN DISPLAYS S1 OR S2 WHEN PRESS THE SWITCHES

CHECK PRIZE OUT DOOR SWITCH

NO →
1. RECONNECT THE CONNECTOR
2. ADJUST OR REPLACE DRIVING PARTS
3. REPLACE PRIZE OUT DOOR SWITCH

YES →

[HOW TO CHECK]
1. CHECK CONNECTION OF PRIZE OUT DOOR SWITCH
2. CHECK SWITCH AND CONNECTOR IS CORRECTLY CONNECTED (COM & N.O)
3. CHECK SENSOR OF PRIZE OUT DOOR SWITCH IS IN POSITION
4. CHECK SWITCH IS BROKEN

CHECK MAIN PCB

NO →
1. RECONNECT THE CONNECTOR

YES →

[HOW TO CHECK]
1. CHECK CONNECTION OF CN14
2. CHECK CONNECTION OF JOIN CONNECTOR

CHECK PRIZE OUT DOOR SWITCH

NO →
1. REPLACE PRIZE OUT DOOR SWITCH

- CODE NO.
[MELE0MIC022]

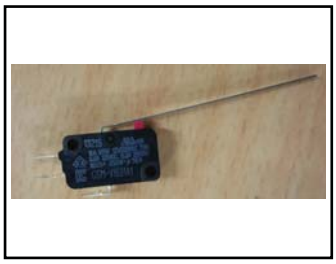

YES →

[HOW TO CHECK]
1. DETACH THE CONNECTOR OF THE SWITCH
CHECK THE RESISTANCE OF THE CONNECTOR (COM&N.0) IS 0OHM OR THERE IS A SOUND BY TESTER MACHINE

REPLACE MAIN PCB

- CODE NO.
[AZZZ0PCB146]

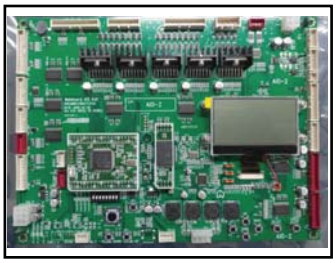

END

* General check up : Check the supply voltage and wiring connection properly
* "NO" : Means faulty of the check up result.

4-5. PRIZE DISPENSER [LOADER] MOTOR PROBLEM [EE-Fn rn]

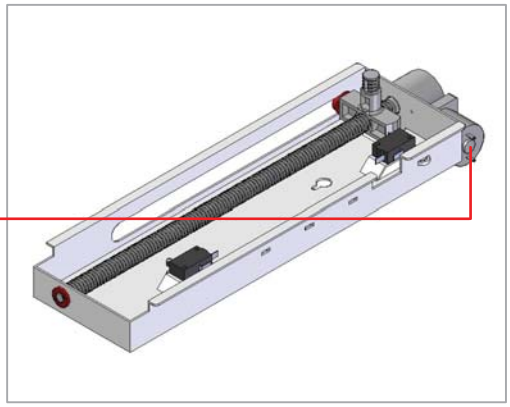

PRIZE LOADER MOTOR PROBLEM EE-Fn rn

PRIZE LOADER MOTOR TEST

YES → END

NO →

[HOW TO TEST]
1. TEST MODE
   # WHEN PRIZE MOTOR OPERATES,
   PRIZE DISPENSER BLOCK SHOULD BE
   RECOGNIZED BY REAR SWITCH AND FRONT SWITCH
   WITHIN 19 SECONDS

CHECK PRIZE LOADER

NO →
1. REPLACE PRIZE DISPENSER SCREW
2. REPLACE PRIZE DISPENSER MAIN BKT

YES →

[HOW TO CHECK]
1. CHECK PRIZE DISPENSER SCREW IS
   BENDING MUCH WHILE OPERATING
2. CHECK POSITION OF BEARING

CHECK MAIN PCB

NO →
1. RECONNECT THE CONNECTOR

YES →

[HOW TO CHECK]
1. CHECK CONNECTION OF CONNECTOR
   CN16, CN17
   PRIZELODER 1~4 : CN16
   PRIZELODER 5~7 : CN17
2. CHECK DC 12 VOLTAGE OF PRIZE LOADER
   MOTOR
   PRIZE 1 : CN16 PIN 1,2 PRIZE 2 : CN16 PIN 3,4
   PRIZE 3 : CN16 PIN 5,6 PRIZE 4 : CN16 PIN 7,8
   PRIZE 5 : CN17 PIN 1,2 PRIZE 6 : CN17 PIN 3,4
   PRIZE 7 : CN17 PIN 5,6
3. CHECK CONNECTION OF JOIN CONNECTOR

CHECK PRIZE LOADER MOTOR

NO →
1. RECONNECT THE CONNECTOR

YES →

[HOW TO CHECK]
1. CHECK CONNECTION OF
   INPUT CONNECOTR

REPLACE PRIZE LOADER MOTOR

NO

REPLACE MAIN PCB

END

- CODE NO.
  [MZZZ0MOT063]

- CODE NO.
  [AZZZ0PCB146]

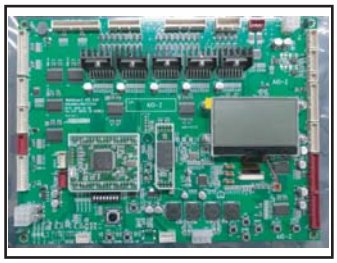

* General check up : Check the supply voltage and wiring connection properly
* "NO" : Means faulty of the check up result.

4-6. PRIZE DISPENSER [LOADER] SWITCH PROBLEM [EE- Fn] or rn or ln F: FRONT, r : REAR, | : BOTH, n : HOLE NUMBER

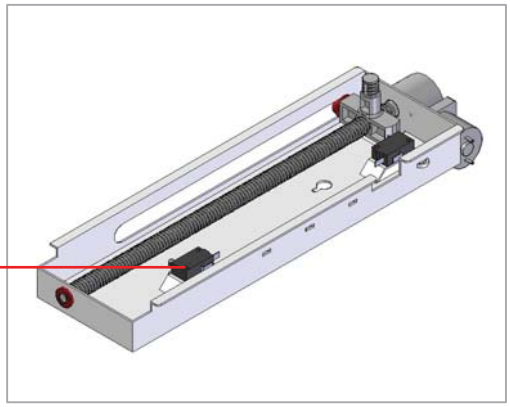

PRIZE LOADER SWITCH PROBLEM [EE- Fn] or rn or ln
F: FRONT, r : REAR, | : BOTH , n : HOLE NUMBER

PRIZE LOADER SWITCH TEST

- YES → END
- NO →

[HOW TO TEST]
1. TEST MODE
   # ENTER PRIZE MOTOR MENU
   CREDIT FND : DISPLAYS II II ON TOP OF FND 2 DIGIT
   TARGET CENTER : DISPLAYS II I ON TOP OF FND 3 DIGIT
2. SET [ALL] IN SETUP LCD
   WHEN YOU PRESS SELECT KEY, ALL PRIZE LOADERS MOVE FORWARD AND STOP AT THE FRONT SWITCH
   ECK IF FND SHOWS BELOW ;
   CREDIT FND : DISPLAYS II II ON TOP OF FND 2 DIGIT
   TARGET CENTER : DISPLAYS II I ON TOP OF FND 3 DIGIT
3. CHECK FND SHOWS WHEN YOU PUSH THE SWITCH

CHECK PRIZE LOADER SWITCH

- NO →
  1. RECONNECT THE CONNECTOR
  2. ADJUST OR REPLACE DRIVING PARTS
  3. REPLACE PRIZE LOADER SWITCH
- YES ↓

[HOW TO CHECK]
1. CHECK CONNECTION OF SWITCH
2. CHECK SWITCH AND CONNECTOR IS CORRECTLY CONNECTED (COM & N.O)
3. CHECK IF PRIZE DISPENSER BLOCK IS IN POSITION.
4. CHECK SWITCH IS BROKEN

- CODE NO.
[MELE0MIC021]

CHECK MAIN PCB

- NO →
  1. RECONNECT THE CONNECTOR
- YES ↓

[HOW TO CHECK]
1. CHECK CONNECTION OF CONNECTOR CN19,CN20
   CN19 : HOLE 1~4.
   CN20 : HOLE 5~7.
2. CHECK CONNECTION OF JOIN CONNECTOR

- CODE NO.
[MELE0MIC021]

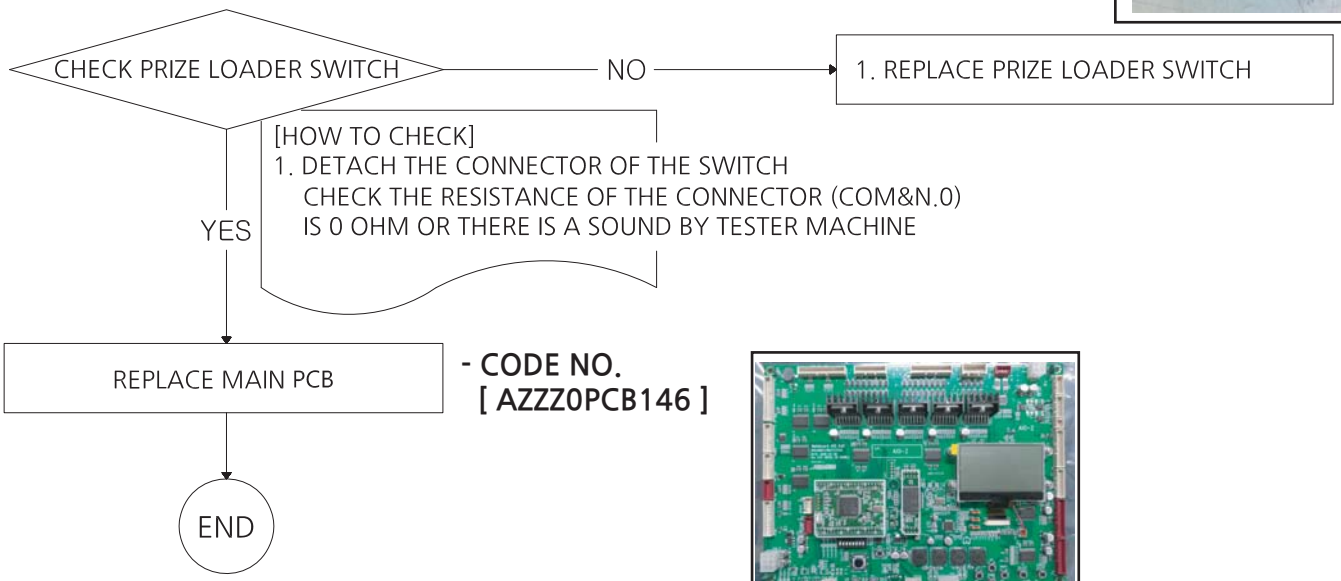

- CODE NO.
[AZZZ0PCB146]

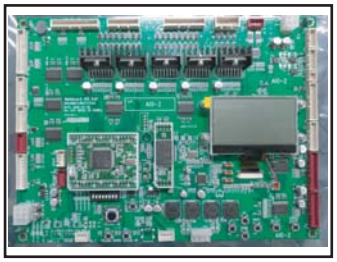

* General check up : Check the supply voltage and wiring connection properly
* "NO" : Means faulty of the check up result.

4-7. Y MOTOR PART [PUSHER BOX] (FORWARD, BACKWARD) Y MOTOR PROBLEM [EE 06 08]

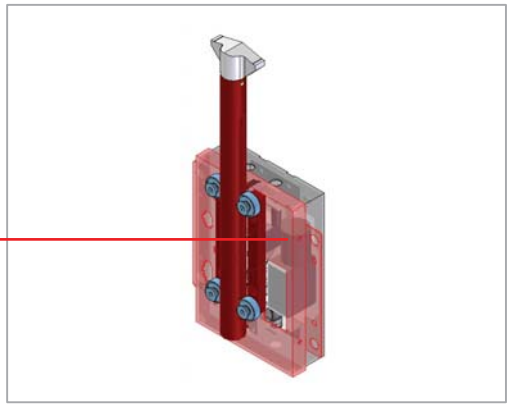

PUSHER BOX (FORWARD, BACKWARD) Y MOTOR PROBLEM EE 06 08

CHECK Y MOTOR — YES → END

NO →

[HOW TO TEST]
1. TEST MODE
#ENTER MOTOR TEST MENU
2. CHECK Y MOTOR BY PRESSING UP&DOWN BUTTON ON MAIN PCB

CHECK Y MOTOR — NO →

1. RECONNECT THE CONNECTOR
2. ADJUST OR REPLACE DRIVING PARTS

YES →

[HOW TO CHECK]
1. CHECK CONNECTION OF MOTOR
2. CHECK CONDITION OF ARROW ASSEMBLY
3. CHECK IF PUSHER RACK GEAR AND Y GEAR ARE IN POSITION
4. CHECK GEAR IS BROKEN

CHECK MAIN PCB — NO →

1. RECONNECT THE CONNECTOR
2. REPLACE MAIN PCB

YES →

[HOW TO CHECK]
1. CHECK CONNECTION OF CONNECTOR CN18
2. CHECK DC VOLTAGE OF CONNECTOR CN18 PIN 1,2 : 12V
3. CHECK CONNECTION OF JOIN CONNECTOR

REPLACE Y MOTOR

- CODE NO. [MWIC0PAR025]

NO →

REPLACE MAIN PCB

- CODE NO. [AZZZ0PCB146]

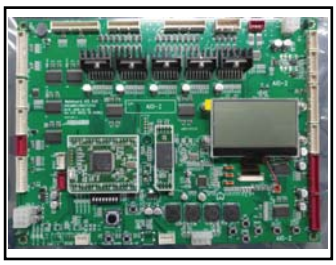

END

* General check up : Check the supply voltage and wiring connection properly
* "NO" : Means faulty of the check up result.

4-8. Y MOTOR PART [PUSHER BOX]
Y MOTOR SWITCH PROBLEM [EE 06 08]

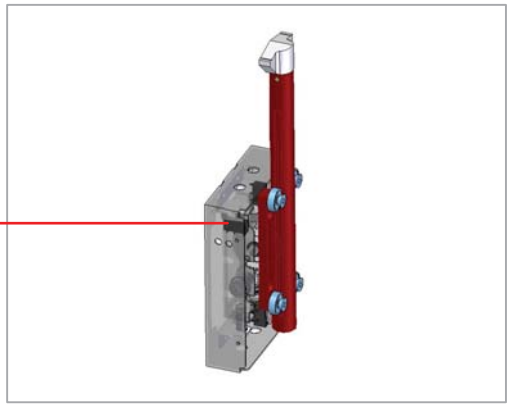

PUSHER BOX Y MOTOR SWITCH PROBLEM [EE 06 08]

CHECK Y MOTOR

YES → END

NO

[HOW TO TEST]
1. TEST MODE
#ENTER MOTOR TEST MENU
2. BY PRESSING UP&DOWN BUTTON ON MAIN PCB, CHECK IF LCD SHOWS FL, RL WHEN ARROW IS SUCCESSED AND BACK
3. CHECK IF LCD SHOWS ML WHEN YOU PULL THE ARROW BY HAND

CHECK Y MOTOR SWITCH

NO →
1. RECONNECT THE CONNECTOR
2. ADJUST OR REPLACE DRIVING PARTS
3. REPLACE SWITCH

YES

[HOW TO CHECK]
1. CHECK CONNECTION OF SWITCH
2. CHECK SWITCH AND CONNECTOR IS CORRECTLY CONNECTED (COM & N.O)
3. CHECK IF SWITCH PIN IS IN POSITION
4. CHECK SWITCH IS BROKEN

CHECK MAIN PCB

NO →
1. RECONNECT THE CONNECTOR

YES

[HOW TO CHECK]
1. CHECK CONNECTION OF CONNECTOR CN18
2 CHECK CONNECTION OF JOIN CONNECTOR

CHECK Y MOTOR SWITCH

NO →
1. REPLACE Y MOTOR SWITCH

YES

[HOW TO CHECK]
1. DETACH THE CONNECTOR OF THE SWITCH
CHECK THE RESISTANCE OF THE CONNECTOR (COM&N.0) IS 0OHM OR THERE IS A SOUND BY TESTER MACHINE

- CODE NO.
[MELE0MIC003]

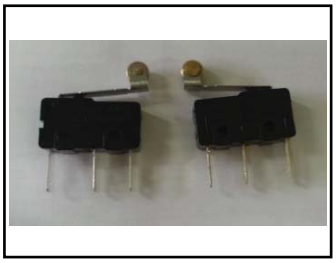

REPLACE MAIN PCB

↓

END

- CODE NO.
  [AZZZ0PCB146]

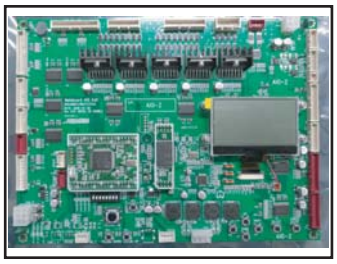

* General check up : Check the supply voltage and wiring connection properly
* "NO" : Means faulty of the check up result.

4-9. CREDIT FND - BUTTON LED - BILLBOARD ASS'Y LED PROBLEM

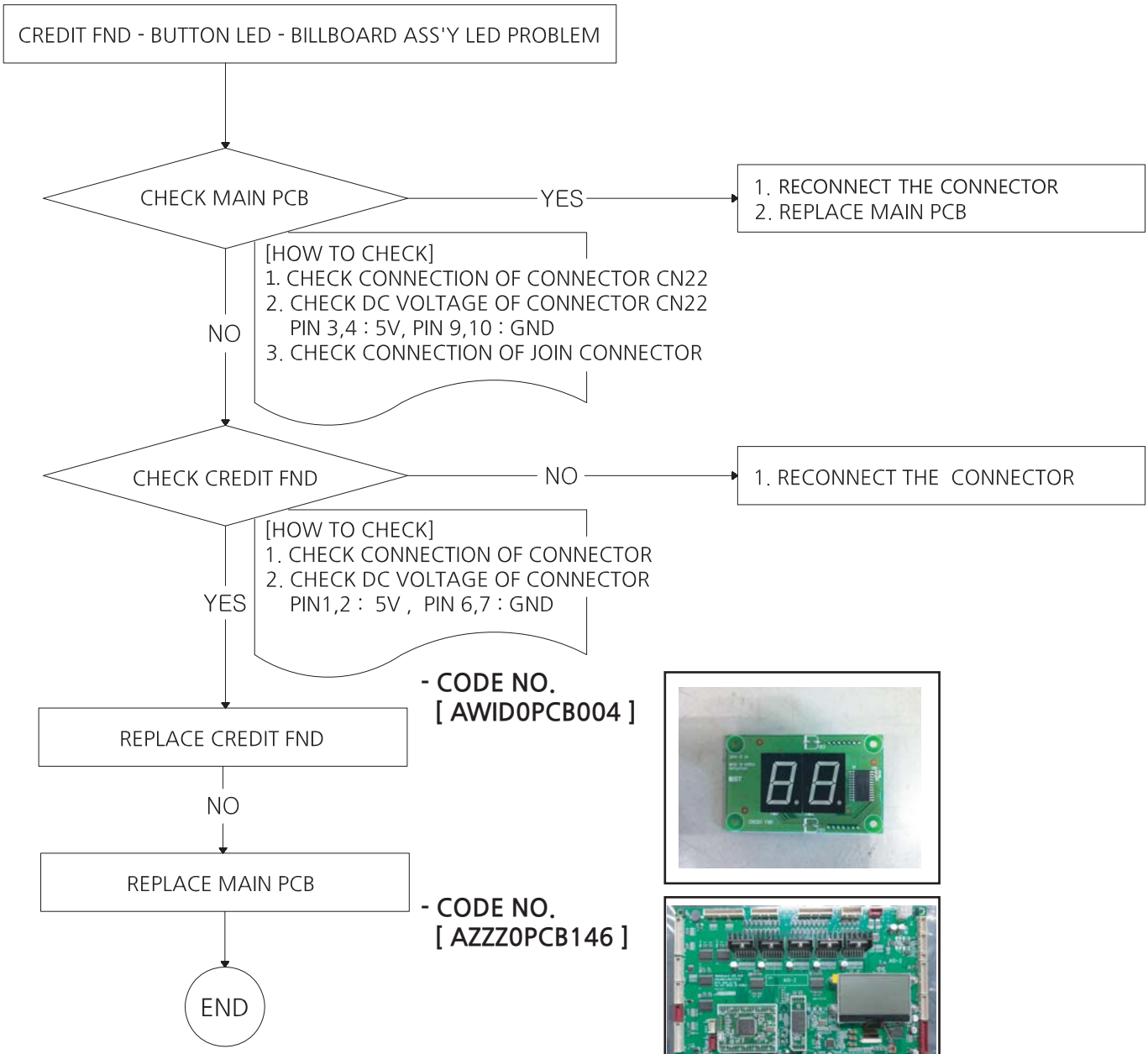

- CODE NO.
[AWID0PCB004]

- CODE NO.
[AZZZ0PCB146]

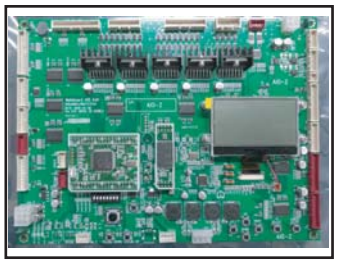

* General check up : Check the supply voltage and wiring connection properly
* "NO" : Means faulty of the check up result.

4-10. TARGET ACRYL SIDE LED 4EA - TARGET CENTER LED PROBLEM

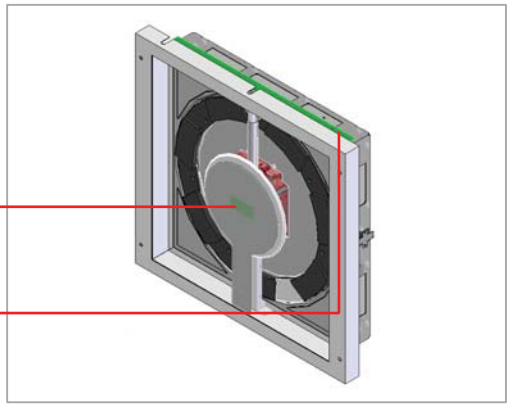

TARGET ACRYL SIDE LED 4EA-TARGET CENTER LED PROBLEM

CHECK MAIN PCB

YES → 1. RECONNECT THE CONNECTOR
2. REPLACE MAIN PCB

NO

[HOW TO CHECK]
1. CHECK CONNECTION OF CONNECTOR CN23
2. CHECK DC VOLTAGE OF CONNECTOR CN23
PIN 1,2 : 12V , PIN 3,4 : 5V,
PIN 8,9 : GND
3. CHECK CONNECTION OF JOIN CONNECTOR

CHECK TARGET SIDE LED

NO → 1. RECONNECT THE CONNECTOR

YES

[HOW TO CHECK]
1. CHECK CONNECTION OF CONNECTOR
2. CHECK DC VOLTAGE OF CONNECTOR
PIN 1,2 : 12V, PIN 3,4 : 5V,
PIN 8,9 : GND

REPLACE TARGET SIDE LED

- CODE NO.
[ASHS0PCB001]

NO

REPLACE MAIN PCB

- CODE NO.
[AZZZ0PCB146]

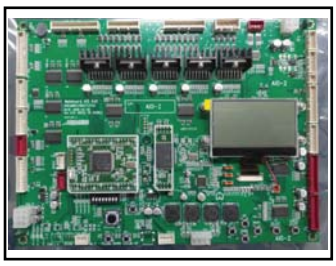

END

* General check up : Check the supply voltage and wiring connection properly
* "NO" : Means faulty of the check up result.

4-11. LCD POWER IS PROBLEM

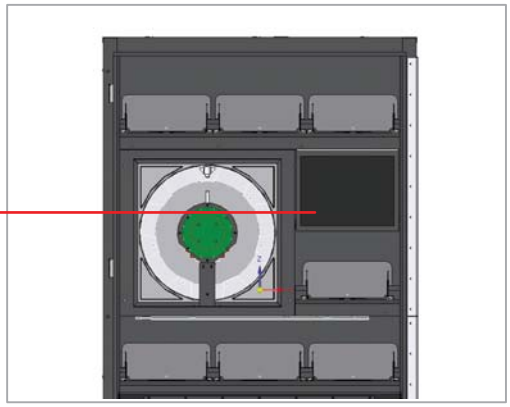

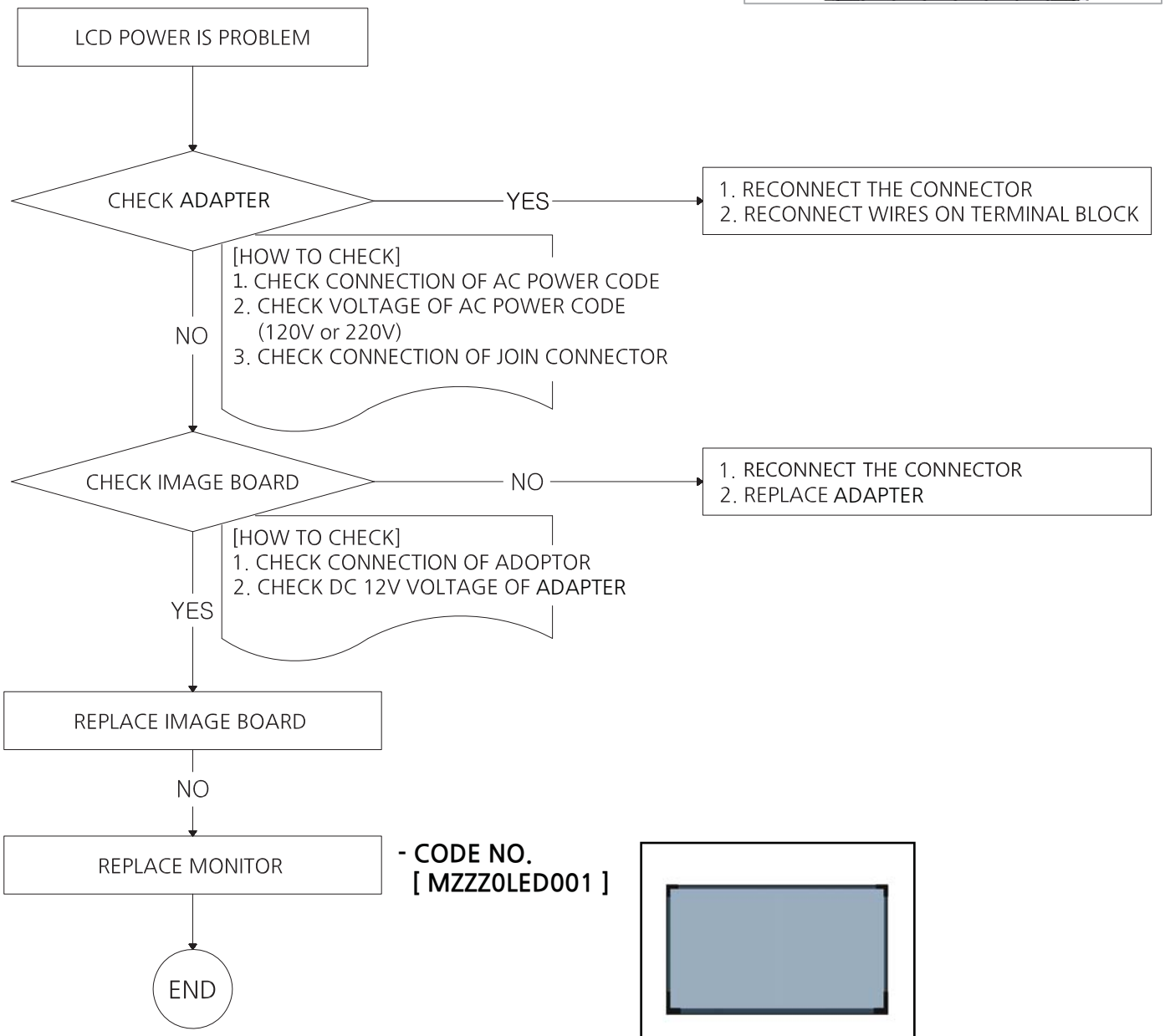

5. EXPLODED VIEW

5-1. MAIN CABINET PART

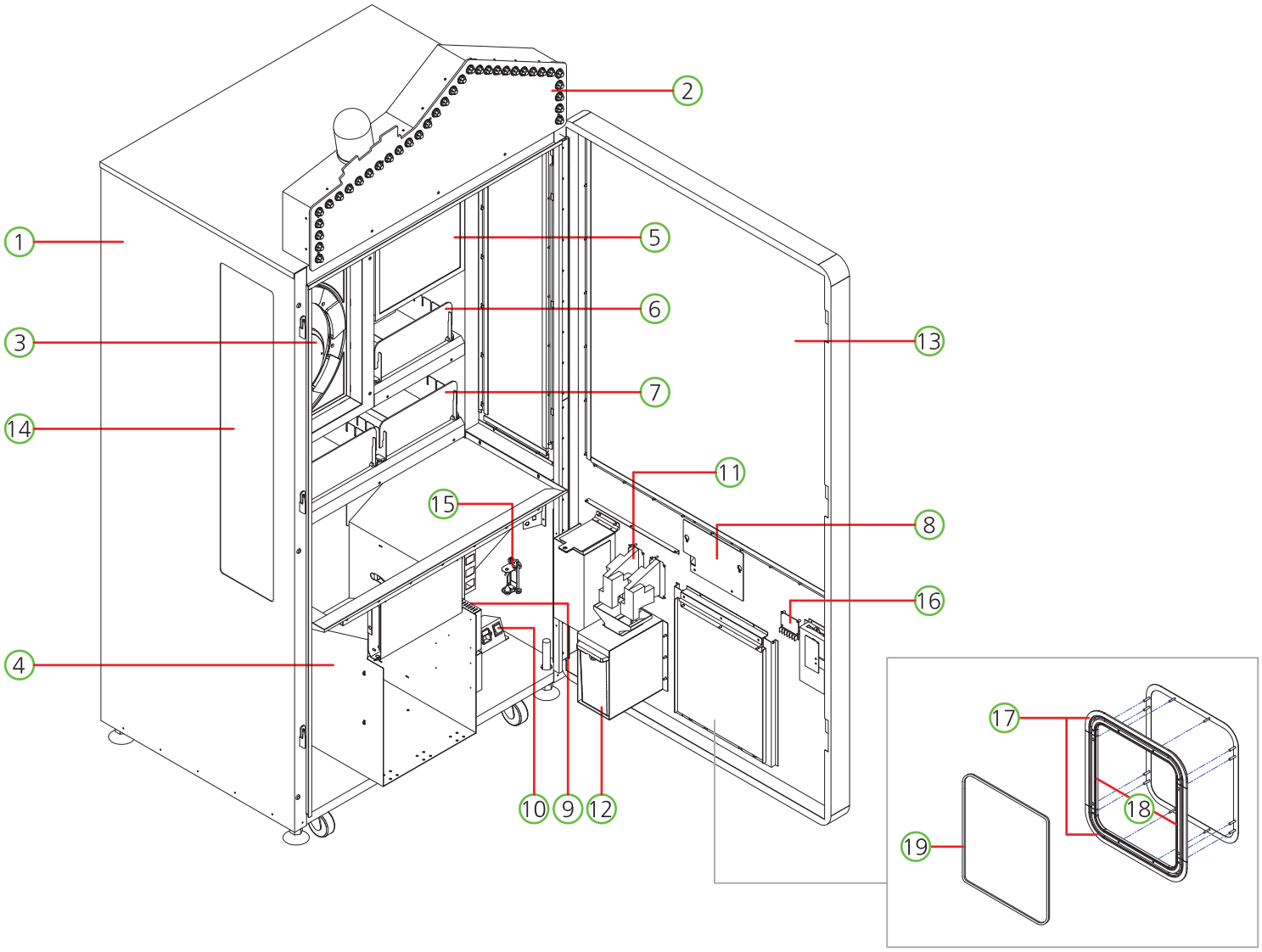

NO.	PART NAME	SPEC.	QUANTITY	CODE NO.
1	MAIN CABINET PART	-	1	-
2	BILLBOARD PART	-	1	-
3	TARGET DISPLAY PART	-	1	-
4	PRIZE OUT DOOR PART	-	1	-
5	PRIZE DISPENSER PART_TOP	-	1	-
6	PRIZE DISPENSER PART_MIDDLE	-	1	-
7	PRIZE DISPENSER PART_BOTTOM	-	1	-
8	BUTTON FRAME PART	-	1	-
9	POWER BOX PART	-	1	-
10	AC INPUT PART	-	1	-
11	COIN SELECTOR	TW-389	2	MZZZ0COS052
12	COIN BOX	200*198*107 BLACK	1	MDRE0PLA007
13	FRONT DOOR GLASS	GLASS-8.0t	1	MSHS0GLA002
14	SIDE GLASS	GLASS-8.0t	2	MSHS0GLA001
15	TILT	-	1	MWIC0PAR100
16	RGB PWM PCB ASS'Y	-	1	MZZZ0000629
17	PRIZE OUT LED ACR-A	ACRYL-12.0t	2	MSAC0ACR010
18	PRIZE OUT LED ACR-B	ACRYL-12.0t	2	MSAC0ACR011
19	FLEX_RGB_1350_NWP_L	-	1	MELE0LED041

5-2. BILLBOARD PART

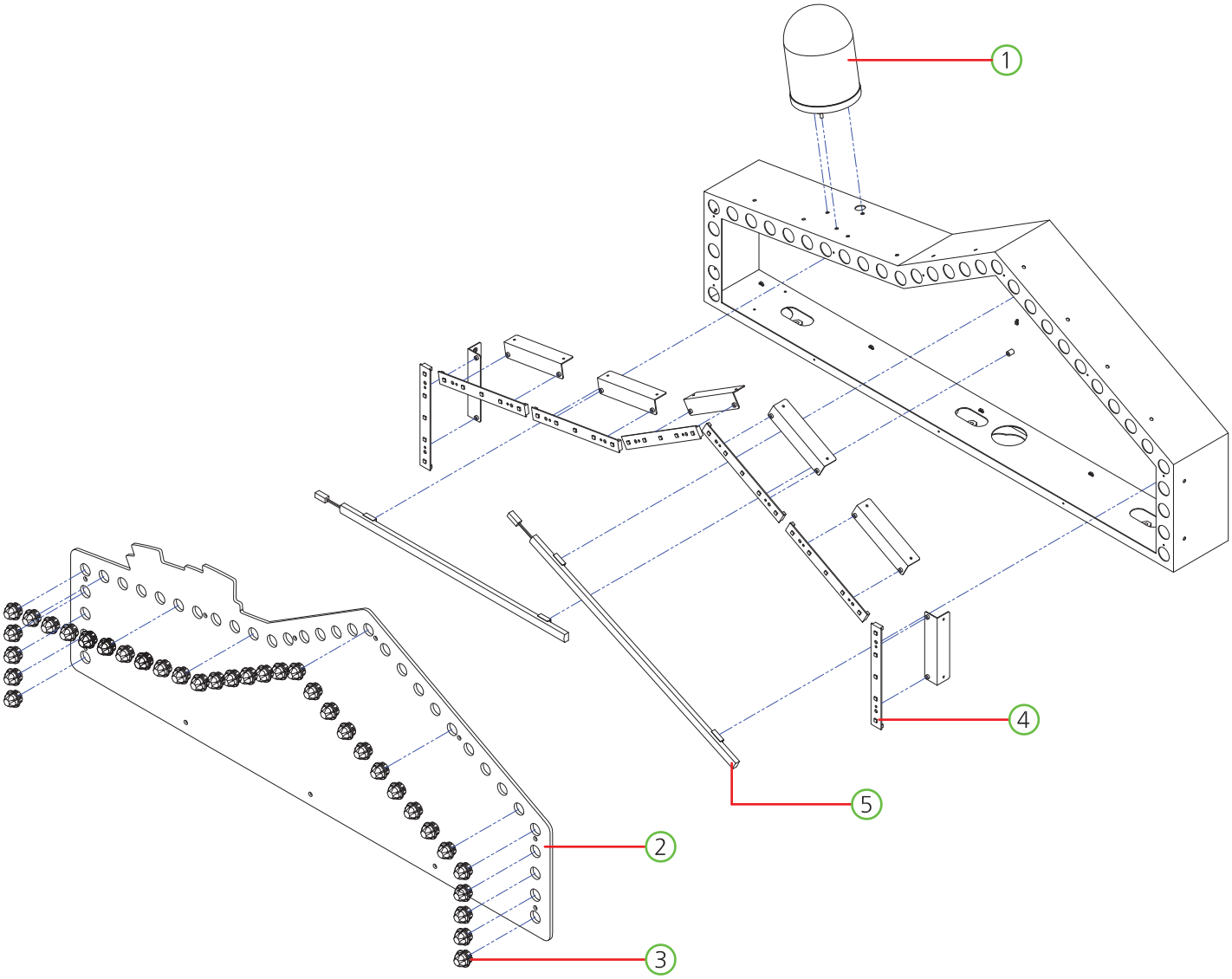

NO.	PART NAME	SPEC.	QUANTITY	CODE NO.
1	SIREN	S100R-12-R	1	MSAC0ZZZ001
2	BILLBOARD MAIN ACRYL	ACRYL-5.0t	1	MSAC0ACR008
3	LED CAP	20mm	35	MZZZ0000521
4	BILLBOARD LIGHTING PCB-C ASS'Y	-	7	ASHS0PCB008
5	LED BAR 12V ASS'Y	460mm	2	AZZZ0PCB124

5-3. TARGET DISPLAY PART

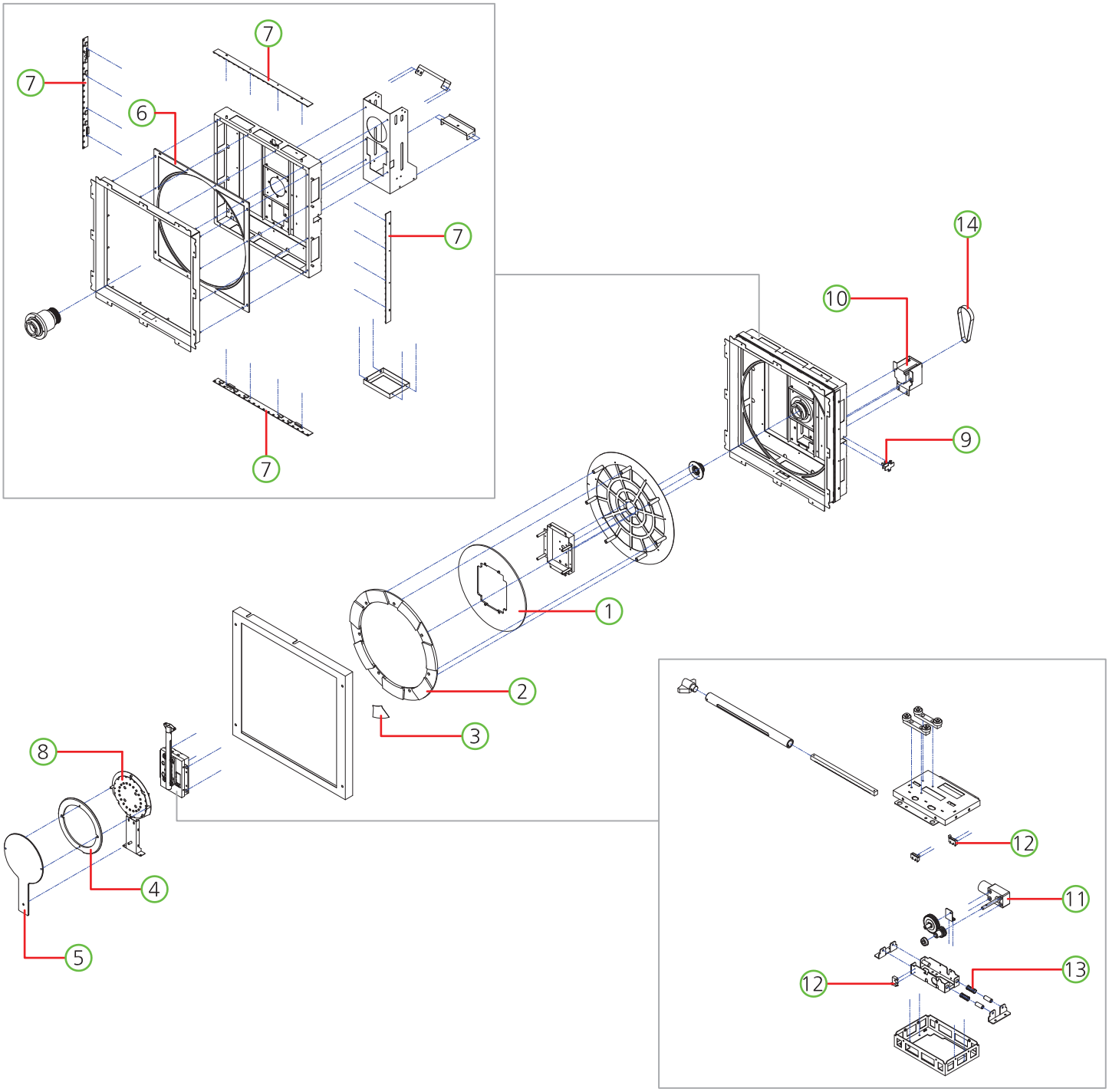

NO.	PART NAME	SPEC.	QUANTITY	CODE NO.
1	TARGET ROTARY INNER DECO ACRYL	ACRYL-5.0t	1	MSAC0MEP032
2	TARGET ROTARY ACRYL	ACRYL-10.0t	1	MSAC0ACR013
3	TARGET NUMBER 1~7	PET-1.0t	7	MSAC0ACR006
4	TARGET FRONT COVER ACRYL-A	ACRYL-5.0t	1	MSAC0ACR004
5	TARGET FRONT COVER ACRYL-B	ACRYL-3.0t	1	MSAC0ACR005
6	TARGET BASE LIGHTING ACRYL	ACRYL-5.0t	1	MSAC0ACR003
7	TARGET SIDE LED PCB ASS'Y	-	4	ASHS0PCB001
8	TARGET CENTER PCB ASS'Y	-	1	ASAC0PCB002
9	PHOTO INT-1 PCB ASS'Y	ANGLE TYPE	1	AZZZ0PCB103
10	STEPPING MOTOR	4S56Q-08576S	1	MZZZ0MOT064
11	MOTOR	DC12V 9100RPM, KWA-0255-IMF-04	1	MWIC0PAR025
12	MICRO SWITCH-S	SSM3142	3	MELE0MIC003
13	Y MOTOR PART TENSION SPRING	-	2	MSAC0SPR001
14	TIMMING BELT	BS3M-339 15mm	1	MZZZ0BEL023

5-4. PRIZE OUT DOOR PART

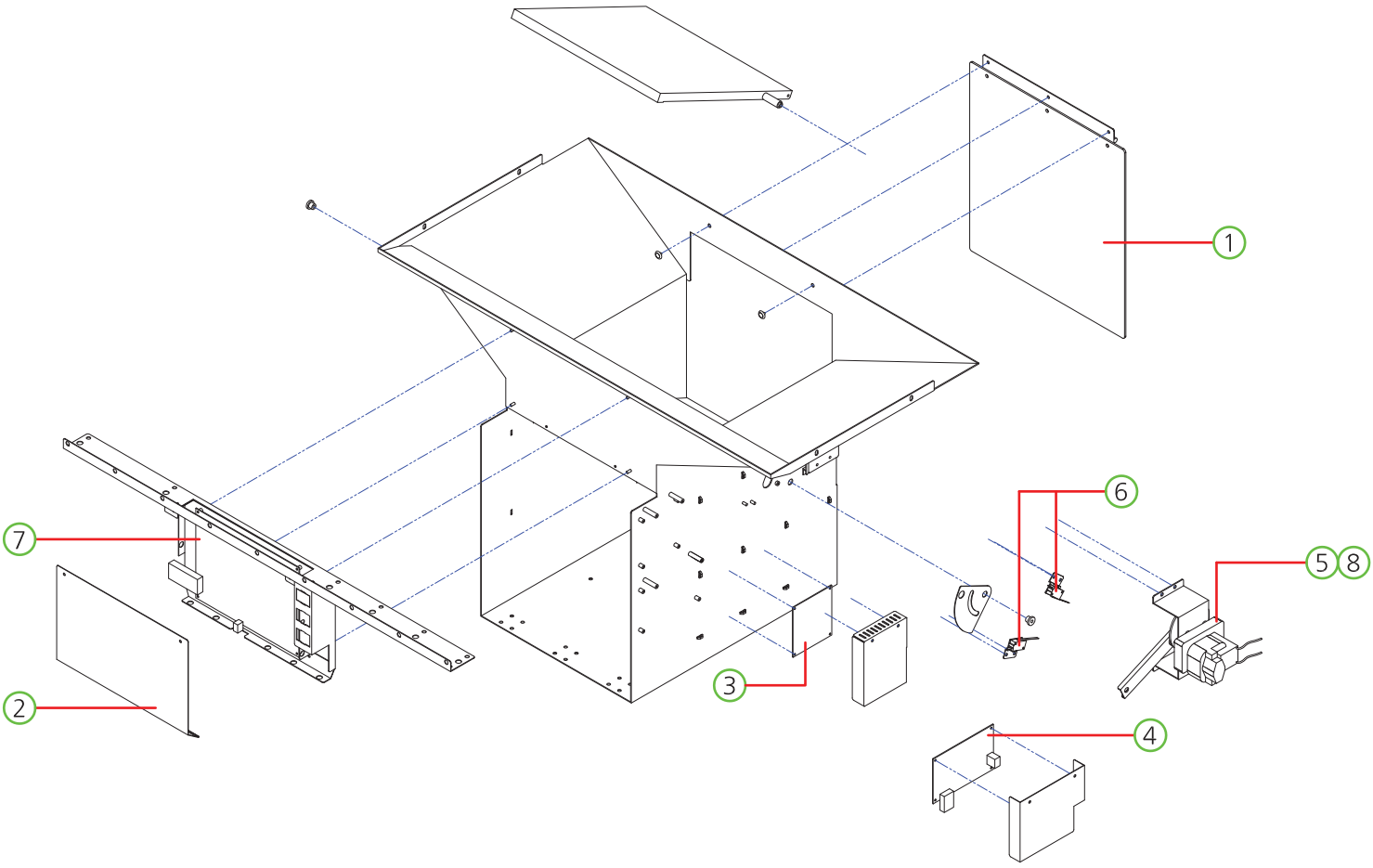

NO.	PART NAME	SPEC.	QUANTITY	CODE NO.
1	HOW TO PLAY ACRYL	ACRYL-2.8t	1	MSAC0ACR002
2	MAIN BOARD COVER	PET-1.0t	1	MSAC0ACR012
3	AC MOTOR PCB ASS'Y	-	1	AICU0PCB007
4	VIDEO PCB ASS'Y	-	1	ASAC0PCB004
5	AC MOTOR [110V]	KGB_0154_6140-A1 UL	1	MZZZ0MOT097
6	MICRO SWITCH	GSM-V1631A1	2	MELE0MIC022
7	MAIN PCB ASS'Y WITH CPU_SOUND	-	1	AZZZ0PCB146
8	AC MOTOR [220V]	KGB_0154_6130_BE	1	MZZZ0MOT071

5-5. PRIZE DISPENSER PART_TOP

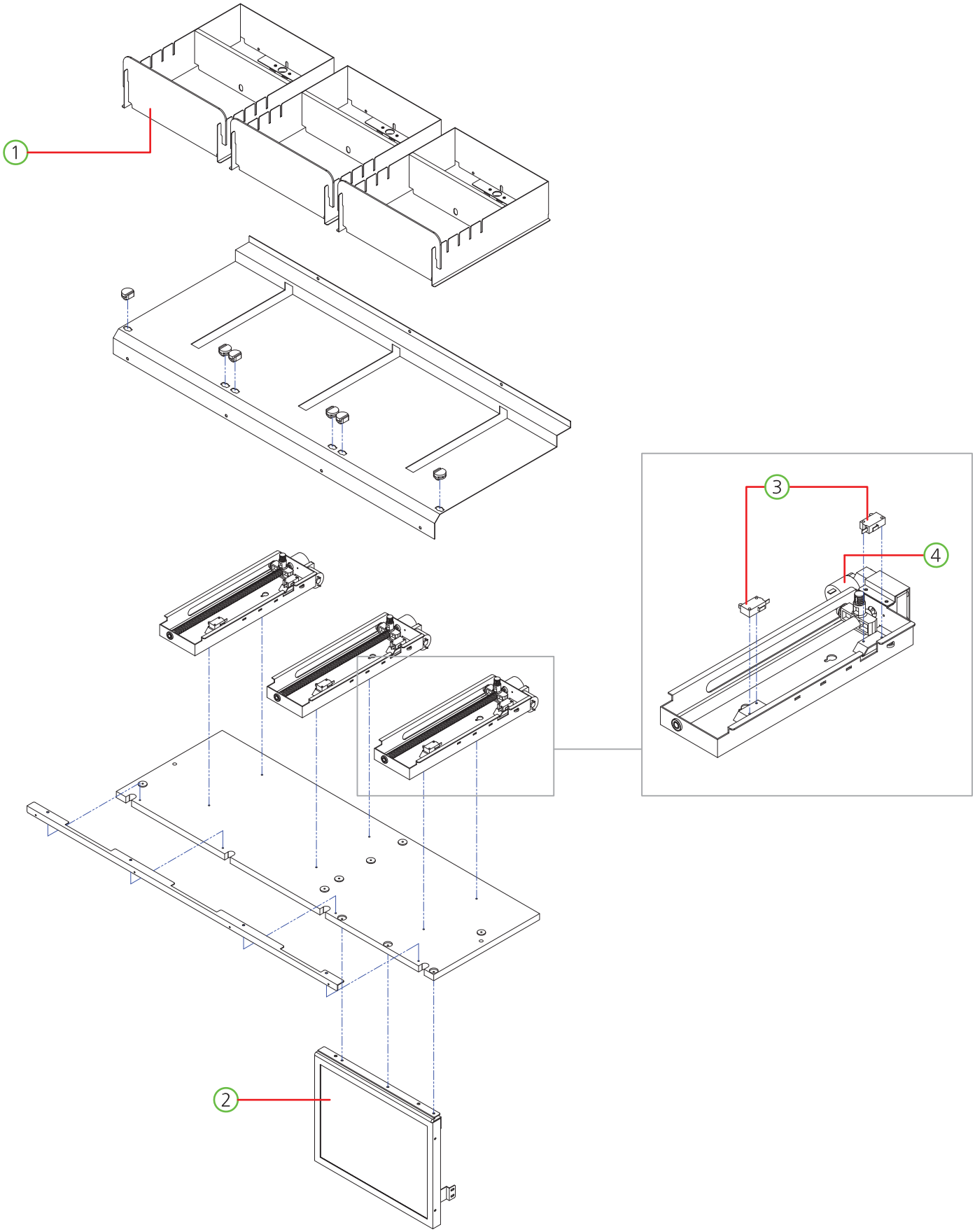

NO.	PART NAME	SPEC.	QUANTITY	CODE NO.
1	PRIZE DISPENSER PUSH ACRYL-A	PC-3.0t	3	MSHS0ACR007
2	LED MONITOR	15"_LM1503A01	1	MZZZ0LED001
3	MICRO SWITCH	GSMV1651A2	2	MELE0MIC021
4	DC MOTOR	KWC-0025-3429	1	MZZZ0MOT063

5-6. PRIZE DISPENSER PAR_MIDDLE

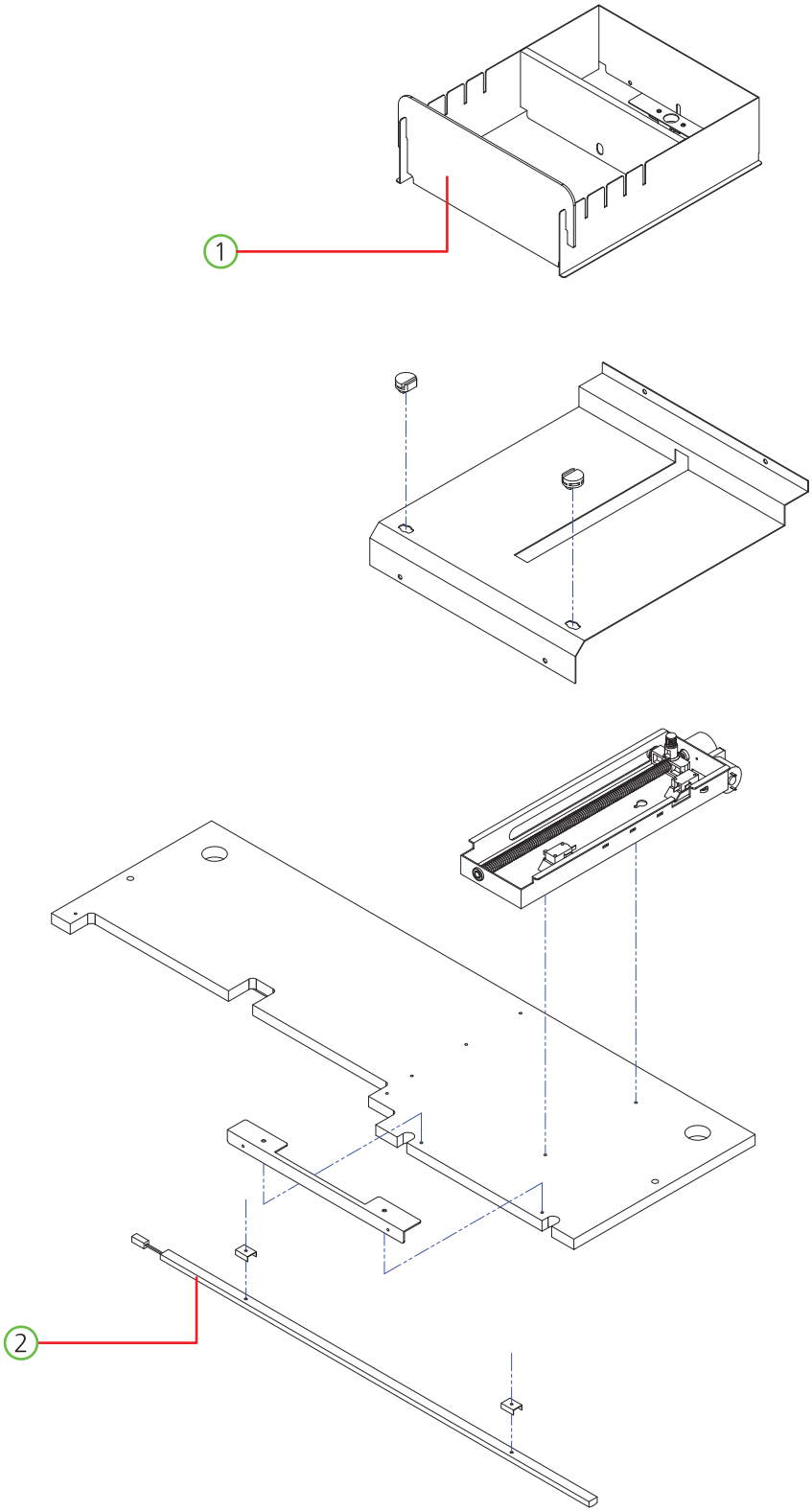

NO.	PART NAME	SPEC.	QUANTITY	CODE NO.
1	PRIZE DISPENSER PUSH ACRYL-A	PC-3.0t	1	MSHS0ACR007
2	LED BAR 12V ASS'Y	710mm	1	AZZZ0PCB165

5-7. PRIZE DISPENSER PART_BOTTOM

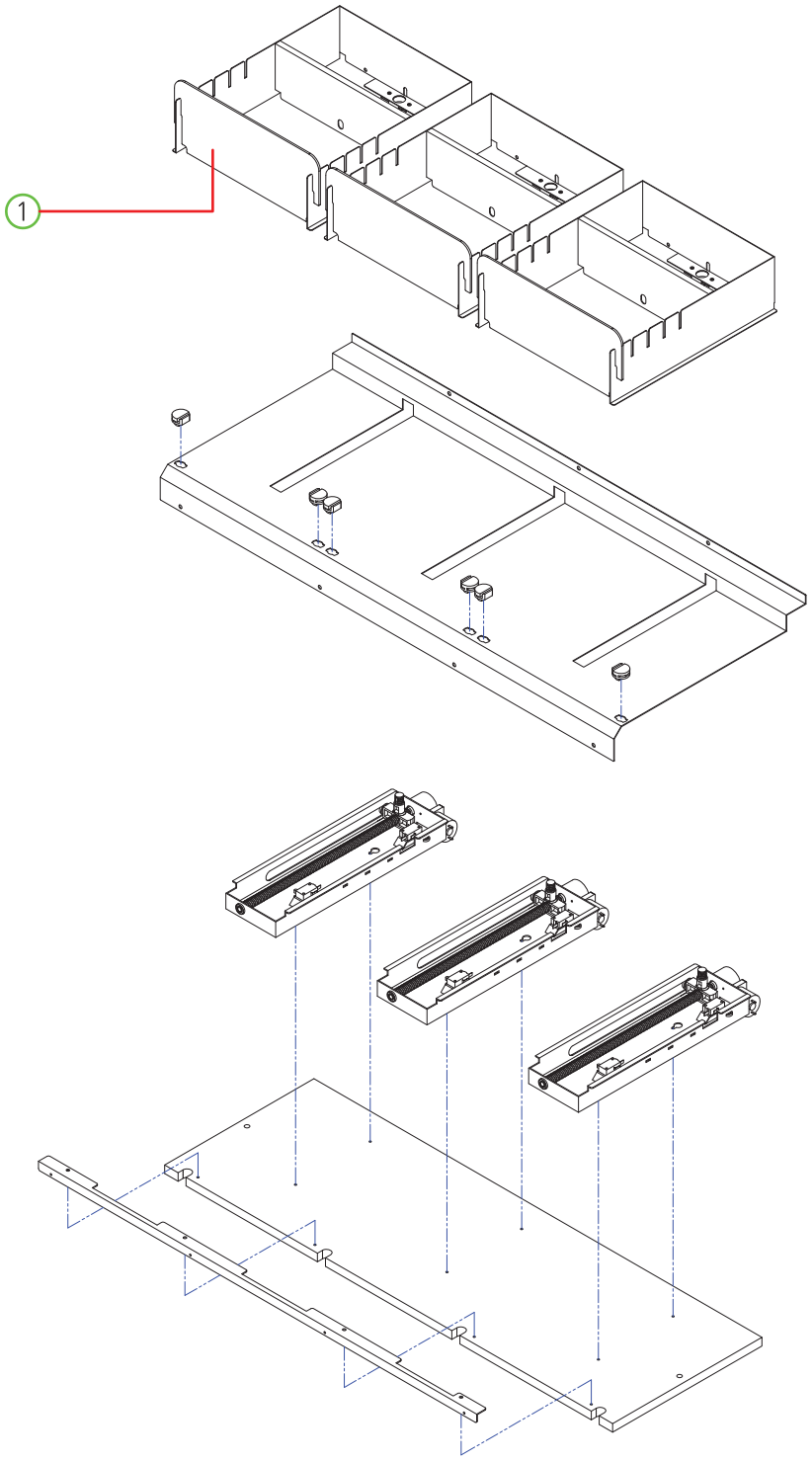

NO.	PART NAME	SPEC.	QUANTITY	CODE NO.
1	PRIZE DISPENSER PUSH ACRYL-A	PC-3.0t	3	MSHS0ACR007

5-8. BUTTON FRAME PART

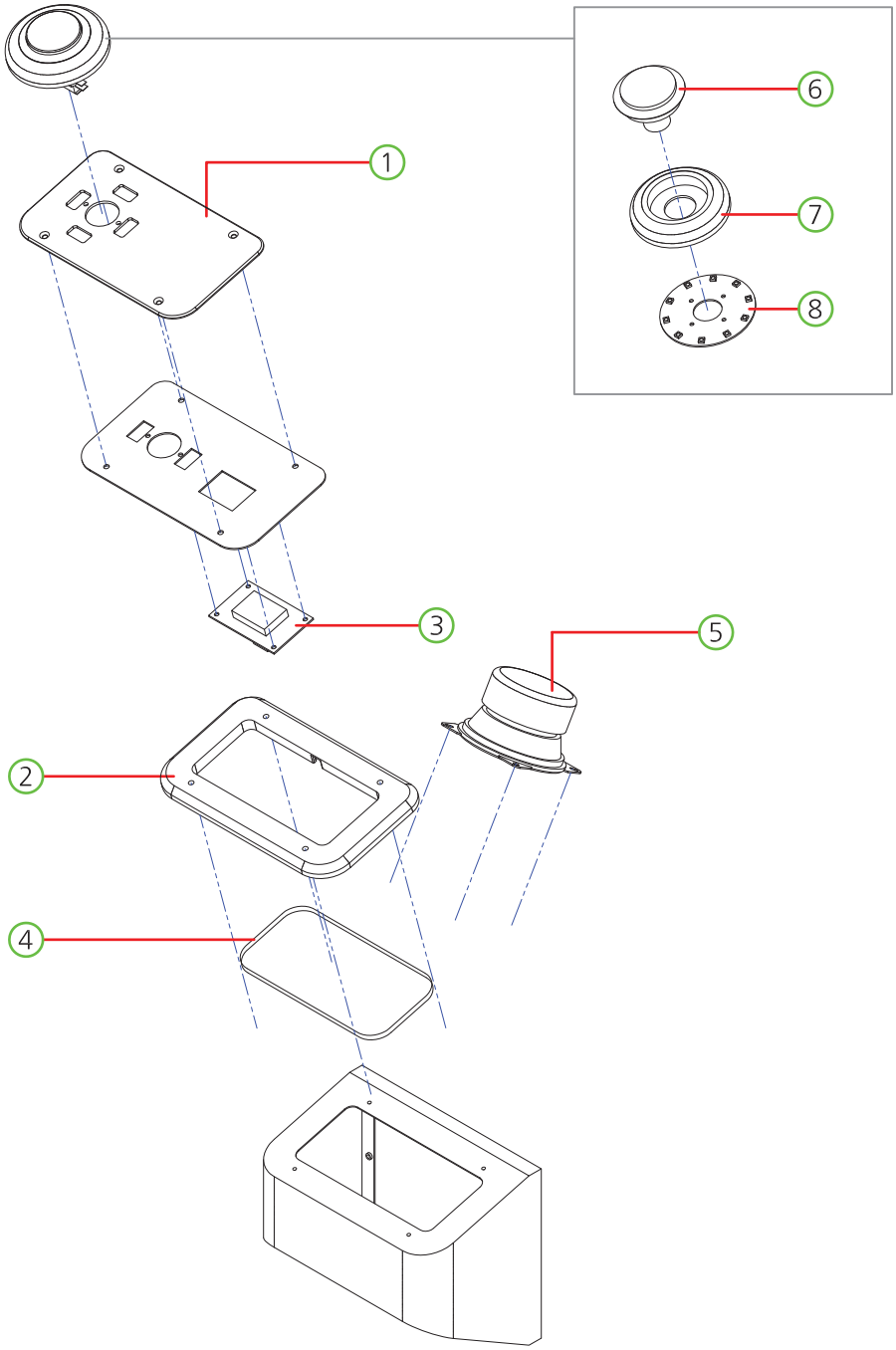

NO.	PART NAME	SPEC.	QUANTITY	CODE NO.
1	BUTTON ACRYL	ACRYL-2.7t	1	MSAC0ACR001
2	BUTTON LIGHT ACRYL	ACRYL-10.0t	1	MSAC0ACR009
3	CREDIT FND PCB ASS'Y	47ohm	1	AWID0PCB004
4	FLEX RGB 500 NWP L	-	1	MELE0LED040
5	SPEAKER	MID4.5"+TW1/2" 8Ω	1	MZZZ0SPE021
6	BUTTON	CL-2020 65 TYPE LED	1	MZZZ0BUT101
7	BUTTON SWITCH HOUSING	-	1	MZZZ0PLA038
8	RGB BUTTON LED PCB ASS'Y	-	1	ASAC0PCB003

5-9. POWER BOX PART

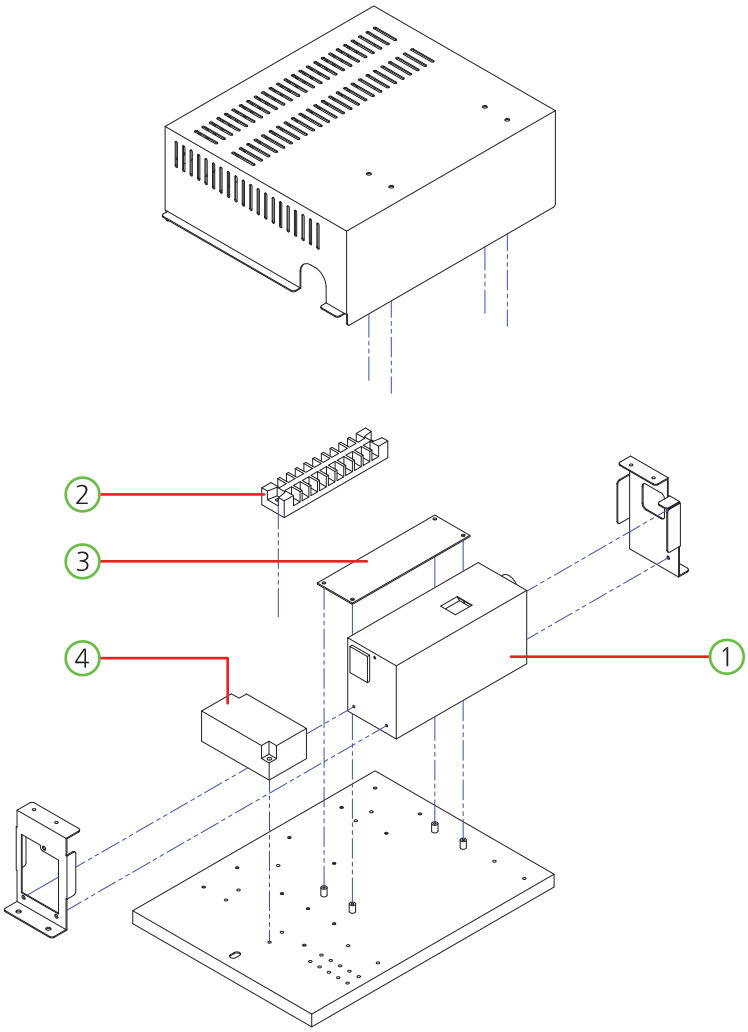

NO.	PART NAME	SPEC.	QUANTITY	CODE NO.
1	ATX POWER SUPPLY	FSP300_60GHT_85	1	MELE0SMP099
2	TERMINAL BKLOCK	250V 10P UL_CE	1	MELE0TEB003
3	ATX JOIN PCB ASS'Y	-	1	ASUP0PCB008
4	NOISE FILTER	RNS-2010	1	MELE0NOI009

5-10. AC INPUT PART

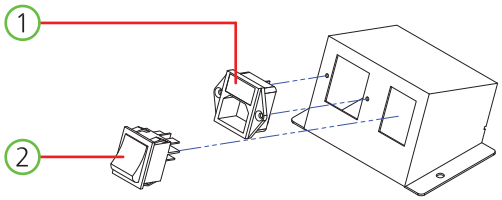

NO.	PART NAME	SPEC.	QUANTITY	CODE NO.
1	AC INPUT	DAC-13H	1	MELE0SWI015
2	ROCKER SWITCH	R595KDF	1	MELE0SWI021

6. PART PICTURE

- BILLBOARD PART

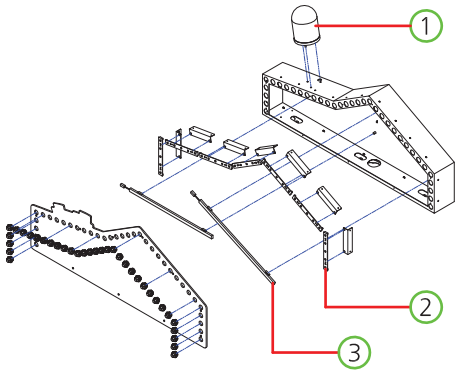

- PRIZE OUT DOOR PART

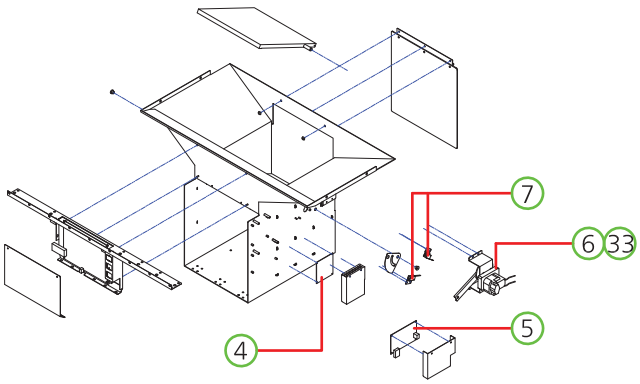

- PRIZE DISPENSER PART_TOP

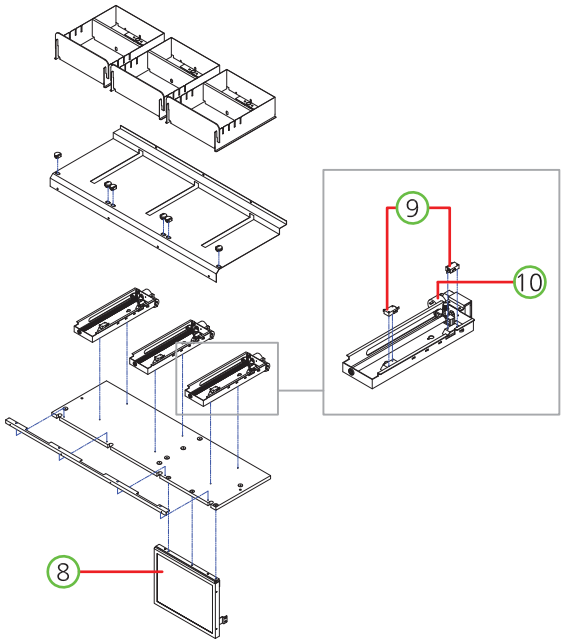

- PRIZE DISPENSER PART_MIDDLE

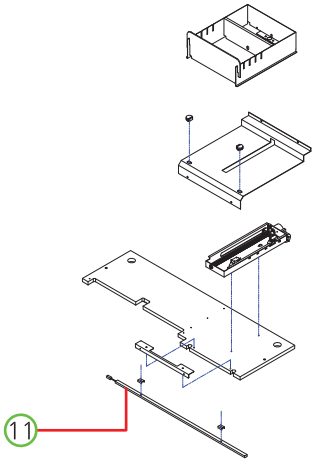

- BUTTON FRAME PART

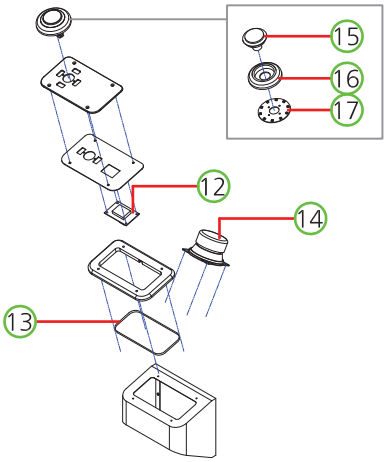

- POWER BOX PART

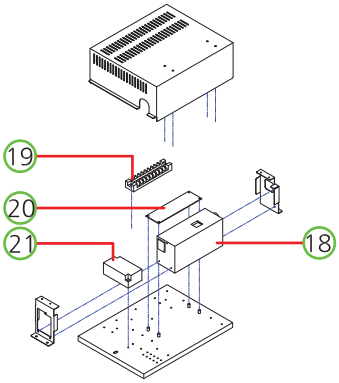

- AC INPUT PART

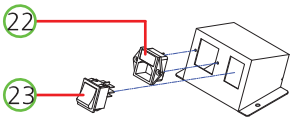

- TARGET DISPLAY PART

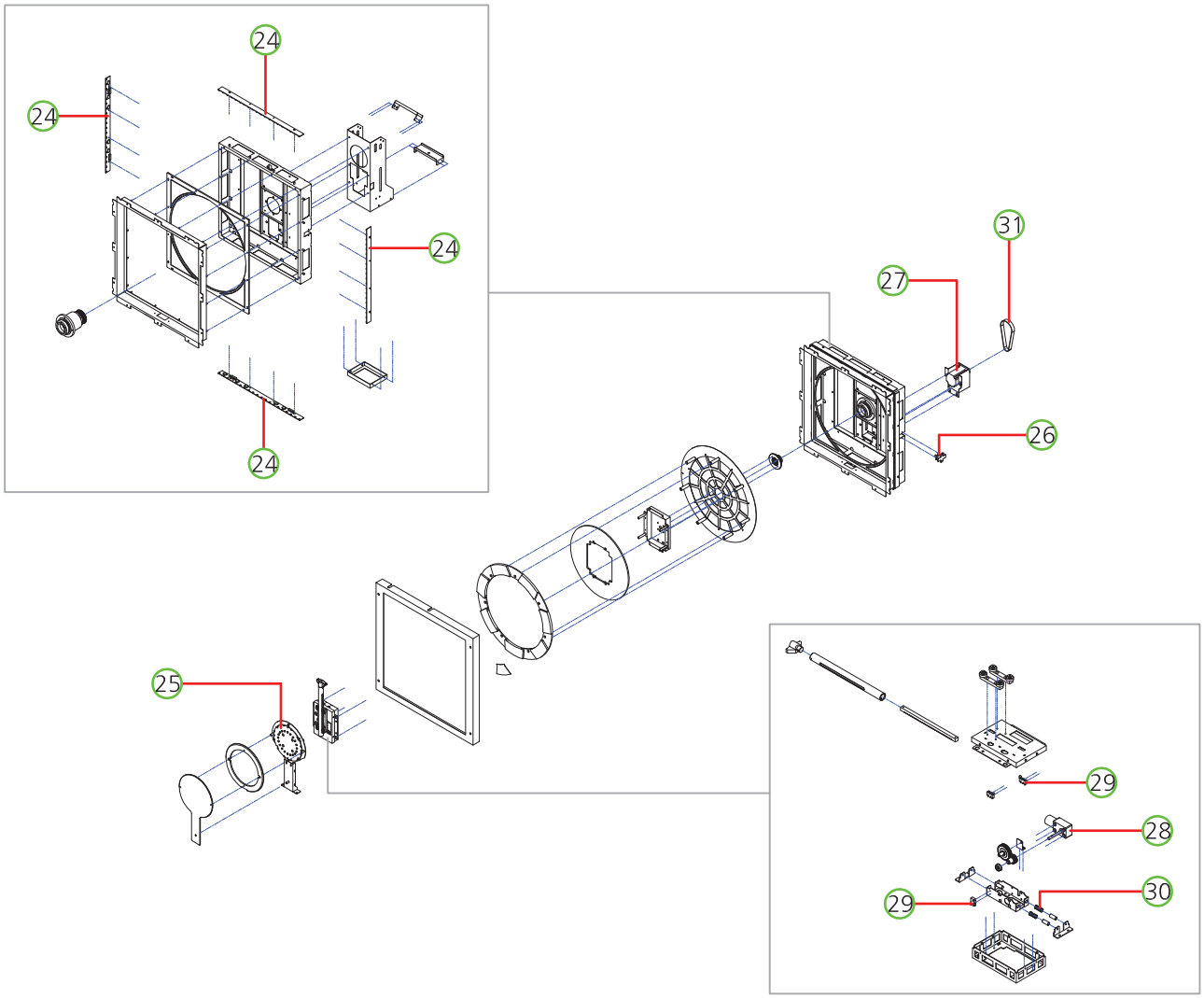

NO.	PIC	PART NAME	SPEC.	QTY	CODE NO.	WARRANTY	
						6 Month	One Year
1	O	SIREN	S100R-12-R	1	MSAC0ZZZ001	N / A	N / A
2	O	BILLBOARD LIGHTING PCB-C ASS'Y	-	7	ASHS0PCB008		O
3	O	LED BAR 12V ASS'Y	460mm	2	AZZZ0PCB124	N / A	N / A
4	O	AC MOTOR PCB ASS'Y	-	1	AICU0PCB007		O
5	O	VIDEO PCB ASS'Y	-	1	ASAC0PCB004		O
6	O	AC MOTOR [110V]	KGB_0154_6140-A1 UL	1	MZZZ0MOT097	O	
7	O	MICRO SWITCH	GSM-V1631A1	2	MELE0MIC022	N / A	N / A
8	O	LED MONITOR	15"_LM1503A01	1	MZZZ0LED001	N / A	N / A
9	O	MICRO SWITCH	GSMV1651A2	2	MELE0MIC021	N / A	N / A
10	O	DC MOTOR	KWC-0025-3429	1	MZZZ0MOT063	O	
11	O	LED BAR 12V ASS'Y	710mm	1	AZZZ0PCB165	N / A	N / A
12	O	CREDIT FND PCB ASS'Y	47ohm	1	AWID0PCB004		O
13	O	FLEX RGB 500 NWP L	-	1	MELE0LED040	N / A	N / A
14	O	SPEAKER	MID4.5"+TW1/2" 8Ω	1	MZZZ0SPE021	N / A	N / A
15	O	BUTTON	CL-2020 65 TYPE LED	1	MZZZ0BUT101	N / A	N / A
16	O	BUTTON SWITCH HOUSING	-	1	MZZZ0PLA038	N / A	N / A
17	O	RGB BUTTON LED PCB ASS'Y	-	1	ASAC0PCB003		O
18	O	ATX POWER SUPPLY	FSP300_60GHT_85	1	MELE0SMP099		O
19	O	TERMINAL BKLOCK	250V 10P UL_CE	1	MELE0TEB003	N / A	N / A
20	O	ATX JOIN PCB ASS'Y	-	1	ASUP0PCB008		O
21	O	NOISE FILTER	RNS-2010	1	MELE0NOI009	N / A	N / A
22	O	AC INPUT	DAC-13H	1	MELE0SWI015	N / A	N / A
23	O	ROCKER SWITCH	R595KDF	1	MELE0SWI021	N / A	N / A
24	O	TARGET SIDE LED PCB ASS'Y	-	4	ASHS0PCB001		O
25	O	TARGET CENTER PCB ASS'Y	-	1	ASAC0PCB002		O
26	O	PHOTO INT-1 PCB ASS'Y	ANGLE TYPE	1	AZZZ0PCB103		O
27	O	STEPPING MOTOR	4S56Q-08576S	1	MZZZ0MOT064	O	
28	O	MOTOR	DC12V 9100RPM, KWA-0255-IMF-04	1	MWIC0PAR025	O	
29	O	MICRO SWITCH-S	SSM3142	3	MELE0MIC003	N / A	N / A
30	O	Y MOTOR PART TENSION SPRING	-	2	MSAC0SPR001	N / A	N / A
31	O	TIMMING BELT	BS3M-339 15mm	1	MZZZ0BEL023	N / A	N / A
32	O	MAIN PCB ASS'Y WITH CPU_SOUND	-	1	AZZZ0PCB146		O
33	O	AC MOTOR [220V]	KGB_0154_6130_BE	1	MZZZ0MOT071	O	

1	2	3	4	5	6
MSAC0ZZZ001	ASHS0PCB008	AZZZ0PCB124	AICU0PCB007	ASAC0PCB004	MZZZ0MOT097

7	8	9	10	11	12
MELE0MIC022	MZZZ0LED001	MELE0MIC021	MZZZ0MOT063	AZZZ0PCB165	AWID0PCB004

13	14	15	16	17	18
			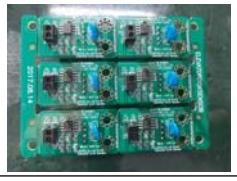		
MELE0LED040	MZZZ0SPE021	MZZZ0PLA038	AGHP0PCB020	ASAC0PCB003	MELE0SMP099

19	20	21	22	23	24
MELE0TEB003	ASUP0PCB008	MELE0NOI009	MELE0SWI015	MELE0SWI021	ASHS0PCB001

25	26	27	28	29	30
				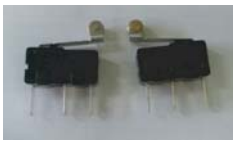	
ASAC0PCB002	AZZZ0PCB103	MZZZ0MOT064	MWIC0PAR025	MELE0MIC003	MSAC0SPR001

31	32
MZZZ0BEL023	MZZZ0BEL023

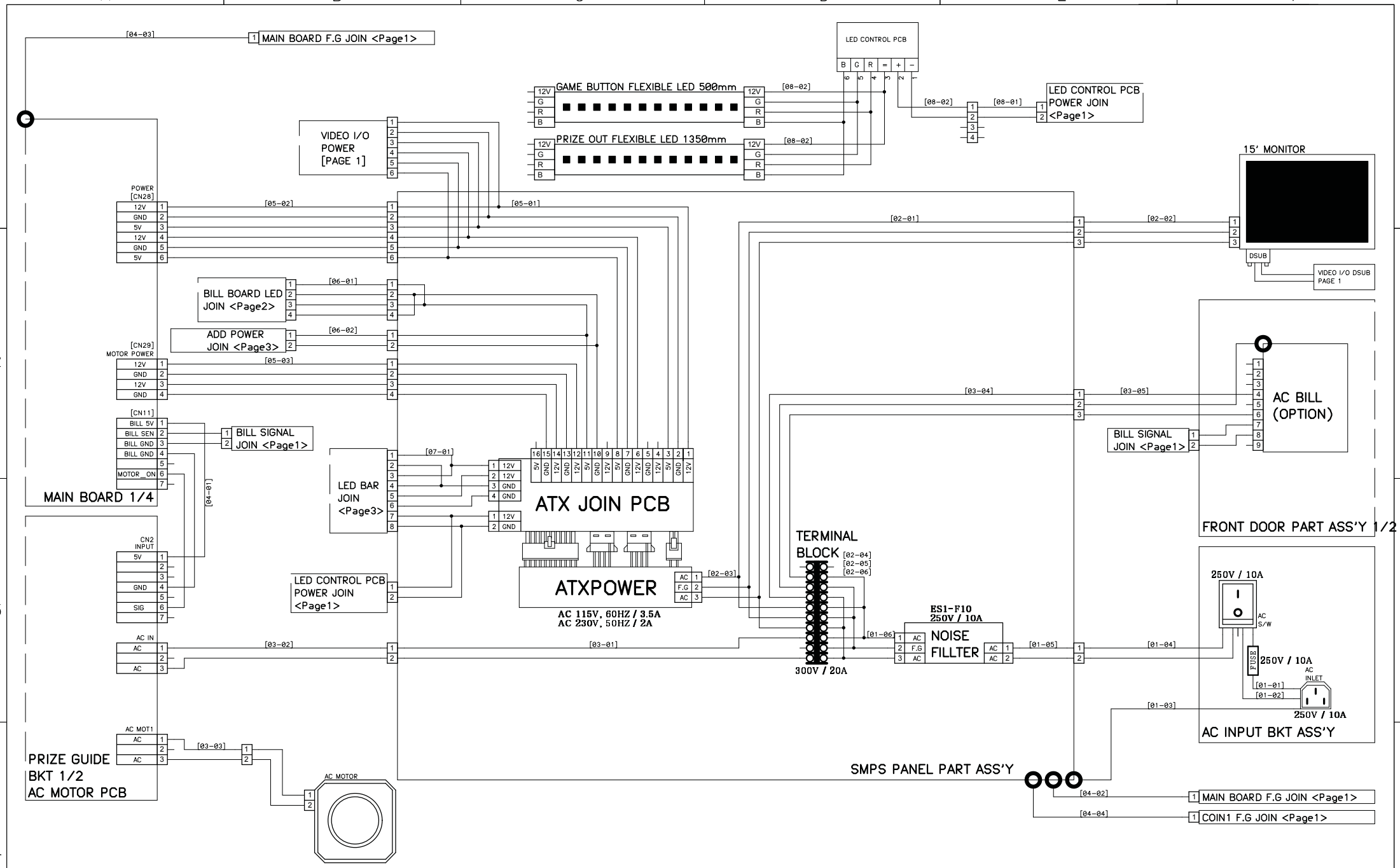

REPRODUCTION, DISTRIBUTION AND UTILIZATION OF THIS DOCUMENT AS WELL AS COMMUNICATION OF ITS CONTENTS TO OTHERS WITHOUT EXPRESS AUTHORIZATION PROHIBITED. OFFENDERS WILL BE HELD LIABLE FOR THE PAYMENT OF DAMAGES.ALL RIGHT RESERVED. COPYRIGHT (c) ANDAMIRO

(복제, 배포 및 사용은 물론, 명시적 허가 없이는 타인에게 내용을 전달할 수 없으며 위반자는 손해 배상 책임을 집니다.)

DEPARTMENT	DRAWN BY	CHECKED BY	APPROVED BY	ITEM	SAFE CRACKER
H/W	H.B.KIM			PAGE	1 of 4
	ANDAMIRO			DATE	2018.11.05

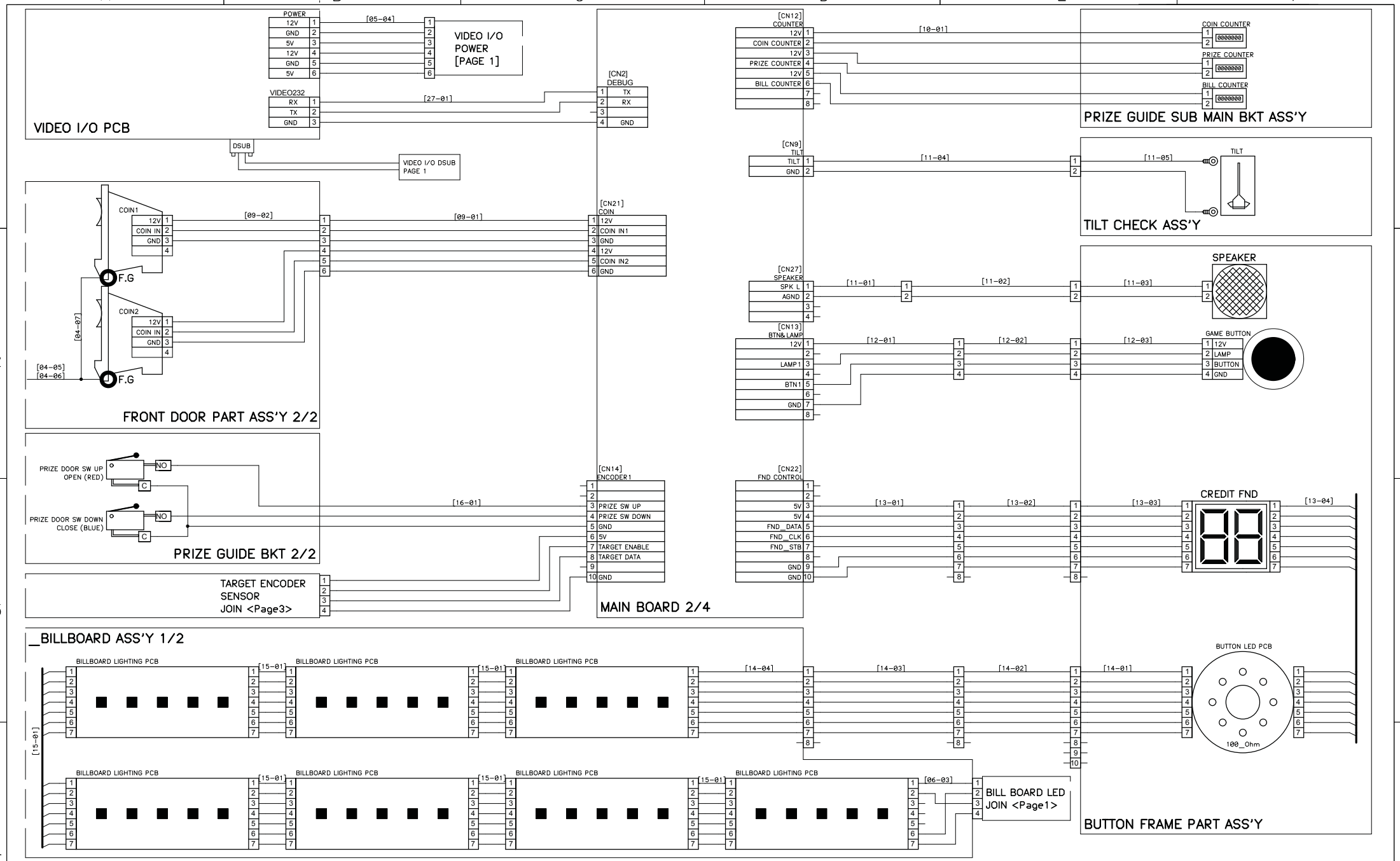

REPRODUCTION, DISTRIBUTION AND UTILIZATION OF THIS DOCUMENT AS WELL AS COMMUNICATION OF ITS CONTENTS TO OTHERS WITHOUT EXPRESS AUTHORIZATION PROHIBITED. OFFENDERS WILL BE HELD LIABLE FOR THE PAYMENT OF DAMAGES.ALL RIGHT RESERVED. COPYRIGHT (c) ANDAMIRO

(복제, 배포 및 사용은 물론, 명시적 허가 없이는 타인에게 내용을 전달할 수 없으며 위반자는 손해 배상 책임을 집니다.)

DEPARTMENT	DRAWN BY	CHECKED BY	APPROVED BY	ITEM	SAFE CRACKER
H/W	H.B.KIM			PAGE	2 of 4
	ANDAMIRO			DATE	2018.11.05

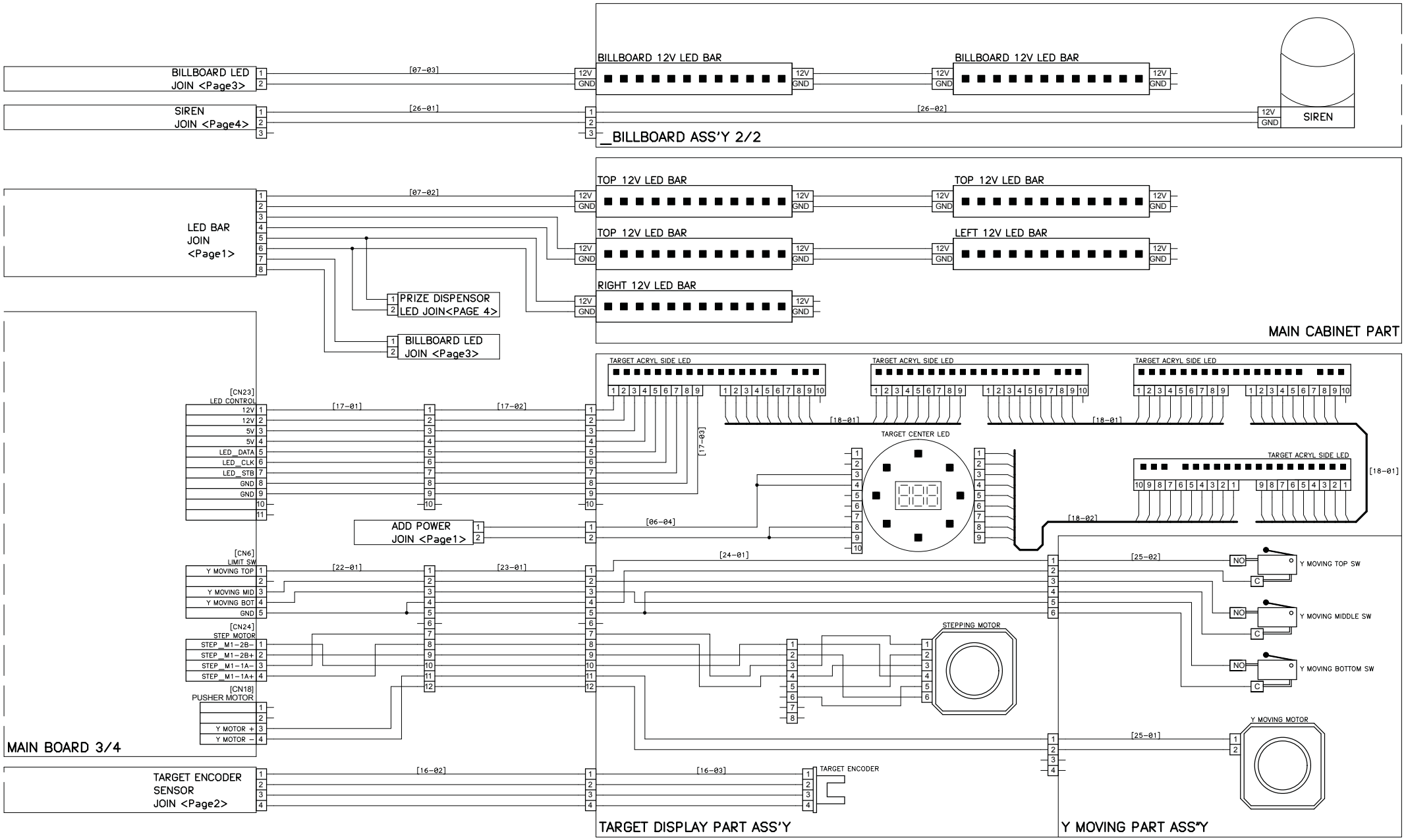

REPRODUCTION, DISTRIBUTION AND UTILIZATION OF THIS DOCUMENT AS WELL AS COMMUNICATION OF ITS CONTENTS TO OTHERS WITHOUT EXPRESS AUTHORIZATION PROHIBITED. OFFENDERS WILL BE HELD LIABLE FOR THE PAYMENT OF DAMAGES.ALL RIGHT RESERVED. COPYRIGHT (c) ANDAMIRO

(복제, 배포 및 사용은 물론, 명시적 허가 없이는 타인에게 내용을 전달할 수 없으며 위반자는 손해 배상 책임을 집니다.)

DEPARTMENT	DRAWN BY	CHECKED BY	APPROVED BY	ITEM	SAFE CRACKER
H/W	H.B.KIM			PAGE	3 of 4
	ANDAMIRO			DATE	2018.11.05

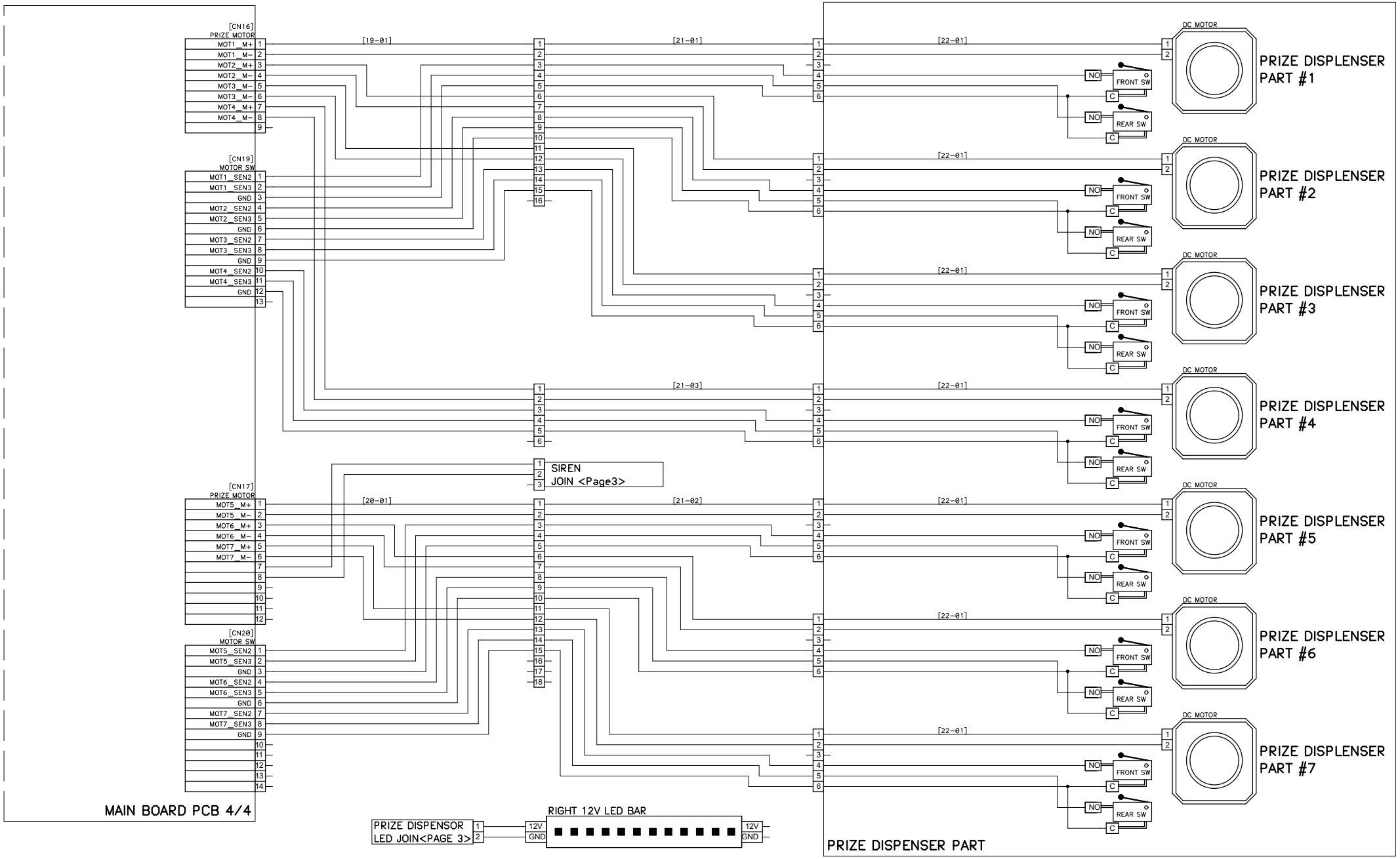

REPRODUCTION, DISTRIBUTION AND UTILIZATION OF THIS DOCUMENT AS WELL AS COMMUNICATION OF ITS CONTENTS TO OTHERS WITHOUT EXPRESS AUTHORIZATION PROHIBITED. OFFENDERS WILL BE HELD LIABLE FOR THE PAYMENT OF DAMAGES.ALL RIGHT RESERVED. COPYRIGHT (c) ANDAMIRO

(복제, 배포 및 사용은 물론, 명시적 허가 없이는 타인에게 내용을 전달할 수 없으며 위반자는 손해 배상 책임을 집니다.)

DEPARTMENT	DRAWN BY	CHECKED BY	APPROVED BY	ITEM	SAFE CRACKER
H/W	H.B.KIM			PAGE	4 of 4
	ANDAMIRO			DATE	2018.11.05

ANDAMIRO WARRANTY POLICY

Andamiro warrants to the original purchaser that all of its products will be free from defects in material and workmanship.

Andamiro warrants the parts from date of shipmet as follows.

- One Year Limited Warranty : Electronic Boards
- 6 Month Limited Waranty : Moving Parts

For any key components within the warranty period, Andamiro will repair or replace defective components free of charge.

When placing a warranty request, the customer is requested to furnish the following information:

1. Name of the game.
2. Serial Number of the game.
3. A Detailed Description of the defect/s experienced.

This warranty does not apply to the defects caused due to misuse or abuse of the product.

Any alterations made to game or game parts will void this warranty.

For warranty details on our product range please visit our website, www.andamiro.com.

ANDAMIRO CO., LTD.
www.andamiro.com

Please complete the following request form to place a warranty request and send it to ANDAMIRO Korea either by fax (Fax No: +82-31-908-7548) or by e-mail. The e-mail address of the person in charge of each region is shown in our web-site, www.andamiro.com

For the on-line request, please visit our web-site, www.andamiro.com and click "Customer Service" and then click "Contact Us" in which you shall find the e-mail address of the person in charge of each region.

1. Company Name : _____

2. Mailing Address : _____

_____

3. E-Mail Address : _____

4. Phone No : _____

5. Name of the person in charge : _____

6. Description of the product defects

6-1) Name of the Game : _____

6-2) Serial No : _____

6-3) Date of Purchase : _____

6-4) Detailed description of the product defects.

_____

_____

_____

Remarks: If possible, please provide us with related photos and videos which will be greatly appreciated to verify the cause of the problem.

ANDAMIRO CO., LTD.
TEL : 82-31-909-2123~5

[ADDRESS OFFICE] 704-1 Techno Town, 138, Ilsan-ro, Ilsandong-gu, Goyang-si, Gyeonggi-do, Republic of Korea 10442
[FACTORY] 72 Nochemgil, Ilsan-donggu Goyang-si, Gyonggi-do, 410-834 korea

USA BRANCH
ANDAMIRO USA CORP.
TEL : 1-310-767-5800

[ADDRESS] 17230 S. Main Street Gardena, California 90248 U.S.A.

Homepage http://www.andamiro.com/

ANDAMIRO®